Integrating LID into local codes:

A GUIDEBOOK FOR LOCAL GOVERNMENTS

draft
June 2011

Prepared for the Puget Sound Partnership by AHBL

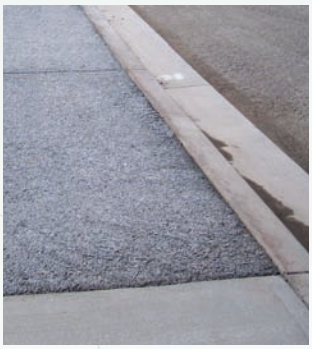

PugetSoundPartnership
our sound, our community, our chance

AHBL

ACKNOWLEDGEMENTS

Project Team - AHBL

Wayne Carlson, Associate Principal
Brad Medrud, Senior Planning Project Manager
Holly Williams, Designer/Planner
Kevin Gifford, Planner
Michael Hintze, Planner

Puget Sound Partnership

Bruce Wulkan, Project Manager

Acknowledgements

We wish to thank the following individuals for providing valuable direction and review of drafts:

Harriet Beale, Department of Ecology
Cathy Beam, City of Redmond
Bill Derry, Consulting Engineer
Ed O'Brien, Department of Ecology
John Palmer, US EPA, Region 10
Brandon Sweezea, Island County

Citation

Puget Sound Partnership, 2011, *Integrating LID into Local Codes: A Guidebook for Local Governments*, prepared by AHBL for the Puget Sound Partnership, June 2011.

TABLE OF CONTENTS

Introduction.....1

Why LID?

Why Integrate LID into Codes?.....7

Step 1 {Who}

Assemble the Project Team.....17

Step 2 {What}

Understand General Topics to Address.....25

Step 3 {Where}

Review Existing Codes and Standards.....37

Step 4 {Fill the Gaps}

Amend Existing Codes and Develop New Codes.....47

Step 5 {Review & Adopt}

Public Review and Adoption Process.....69

Step 6 {Implementation}

Ensure Successful Implementation.....73

Appendices.....77

FORWARD

When a group of early implementers and I were planning our region's (and the nation's) first conference on LID in 2000, many regional professionals asked "LID? Do you mean local improvement district?"

We've come a long way in 11 years. Not only is the term "LID" well understood today, our region is viewed by many as a national leader due to our many LID projects, LID professional training and certificate programs, LID technical guidance manual, continual refinements to LID techniques, and LID monitoring and research. The Washington State University Puyallup Research & Extension Center is now one of the most extensive research centers for LID in the nation. Seattle Public Utilities' Natural Drainage Systems projects have won national awards and provide the region, and the nation, with strong leadership. Local government staff and private sector design professionals and developers, too numerous to list here, provide a robust knowledge and experience base to draw from as new projects are contemplated.

We in the stormwater field in the Puget Sound region are indeed fortunate. I feel very fortunate to have been given the opportunity to move LID forward in this region by collaborating with many fine people on LID education, professional training, technical guidance development, and local code assistance.

Over the last decade, our region has been transitioning from the use of conventional stormwater management practices to the LID approach, and for very good reasons. Science and monitoring shows the Sound is in decline, and stormwater runoff from developed lands plays a big role in that decline. Iconic salmon are threatened with extinction. The majority of many toxic compounds reach the Sound via stormwater runoff. Bottom-dwelling species like English sole bear a toxic burden due to chemicals carried by stormwater. Harvest at more and more shellfish growing areas is restricted due to stormwater runoff. Many swimming beaches are closed due to stormwater runoff. Urban bay sediments are contaminated due to stormwater and other sources. The overall health of many freshwater ecosystems, as measured by bugs in streams, is declining due to our inability to fully mitigate the range of harms caused by watershed development. Clearly, our past stormwater management and land development practices aren't working.

The reasons go well beyond environmental protection. Like most other things, stormwater management is becoming more expensive, and we need more cost-effective means of managing runoff than extensive pipes, catch basins and ponds. Communities want to grow greener and more sustainably. Conventional practices, like stormwater ponds surrounded by chain link fences, can be eyesores and typically provide only the one function while LID practices, such as bioretention and vegetated roofs, provide multiple benefits.

These and other reasons led the Pollution Control Hearings Board to issue a series of decisions in 2008 and 2009 directing the Department of Ecology to require LID in municipal stormwater permits for western Washington rather than just encourage it. Ecology is currently in the process of adding LID requirements to the municipal permits, and this guidebook and model ordinances are intended to help permittees comply with requirements to change their local codes and standards to require LID where feasible. The guidebook and model ordinances are equally intended to help staff at local governments not covered by the municipal permits revise their codes and standards to make LID the preferred choice for stormwater management.

During 2005-09, the Partnership led the LID Local Regulation Assistance Project, which provided detailed recommendations to 36 local governments for removing barriers to LID, and either encouraging or requiring LID. After this experience, I fully appreciate the time and effort that goes into revising existing and developing new local codes and standards to make LID the preferred, first option for stormwater. It takes a lot of time and energy. Yet it is a critical step that must be taken.

I hope you find this guidebook helpful as you undertake the process of revising your local codes and standards to make LID required where site conditions make it feasible. By doing so, you'll not only be complying with a permit condition (for those local governments covered by the permit), you'll also be helping to transition your community to a greener, more sustainable form of stormwater management.

Bruce Wulkan, Puget Sound Partnership

Introduction

Purpose of This Guidebook

The purpose of this guidebook is to help local government staff throughout Western Washington incorporate low impact development (LID) into local land development and stormwater management codes, standards and regulations so that LID is required where feasible.

The guidebook describes a step-by-step approach for integrating LID into existing and new codes. This guidebook is intended as a resource for local governments complying with LID requirements associated with the pending reissuance of the Phase I and Phase II Western Washington Municipal Stormwater General Permits. In addition, it is meant to be used by local governments who are not subject to the reissued permits, but may want to integrate LID requirements into their codes and standards.

In the appendix, the guidebook provides citations to additional information sources on LID. In addition, model ordinances are provided, which give examples of code language and approaches for local government staff to use when drafting local standards.

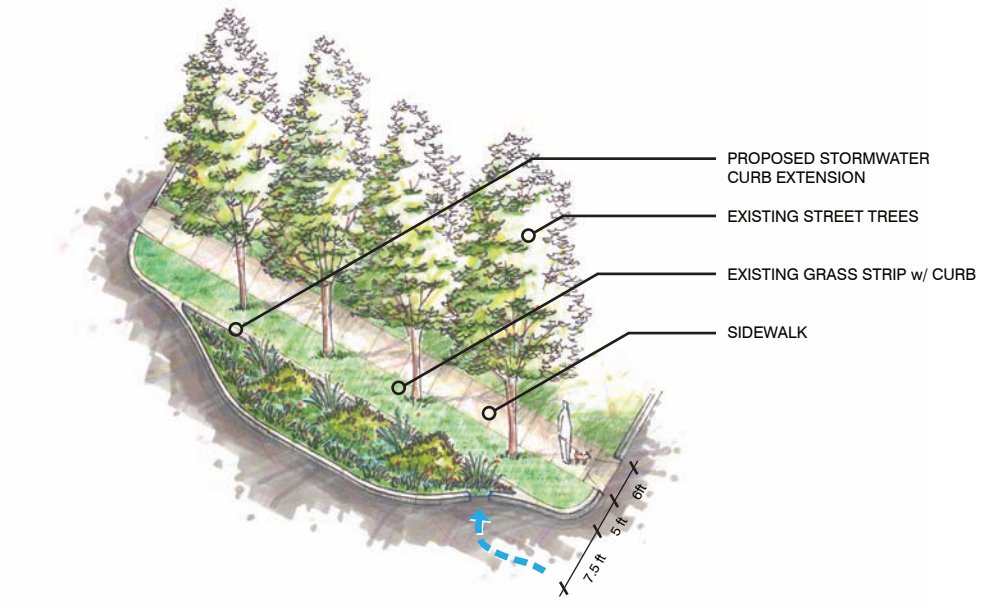

Recognizing that codes and ordinances are organized differently in every jurisdiction, these model ordinances are intended to help local government staff identify obstacles to LID implementation and integrate LID standards into their development codes. Local government staff may find that they can use a model ordinance as written or with some modifications according to their jurisdiction's needs.

This guidebook contains numerous references to "where feasible" or "unless infeasible." These refer to the feasibility criteria for LID that the Department of Ecology (Ecology) is developing as part of the effort to add LID requirements to the municipal stormwater general permits for Western Washington. While the term "where feasible" is not added after every instance of "required" in the Guidebook, it is implied throughout.

Intended Audiences

This guidebook is intended primarily for local government staff responsible for integrating LID into development codes and standards and other staff involved in stormwater management and planning. In addition, the guidebook is intended for members of the development community who wish to gain a better understanding of current requirements and implications for new development, and others who are interested in LID and its implementation.

How to Use the Guidebook and Model Ordinances

Throughout the guidebook, you will see the following icons:

ICON KEY

COST SAVINGS

DEFINITION

DID YOU KNOW?

THIS GUIDEBOOK IS ORGANIZED AS FOLLOWS:

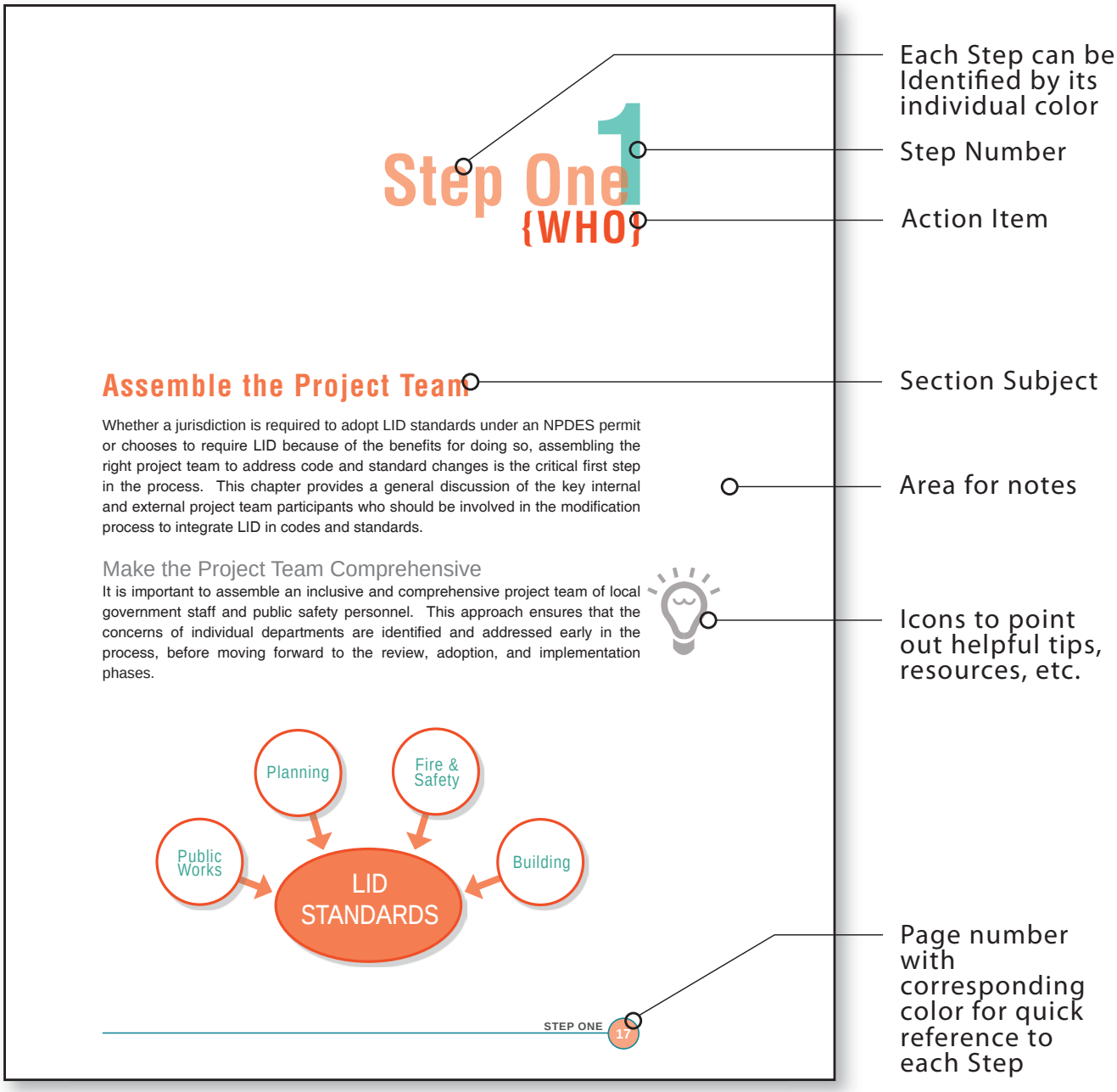

INTRO

THE SECTIONS ARE ORGANIZED AS FOLLOWS:

WHY LID? — Why Integrate LID into Codes?

Explains the reasons behind integrating LID into local codes and standards.

START

STEP 1 {WHO}: — Assemble the Project Team

Discusses who needs to be included to make the project team comprehensive, such as key internal participants and potential key external parties who need to be brought into this process.

STEP 2 {WHAT}: — Understand General Topics to Address

Links the "Who" in Step 1 to the "Where" in Step 3 and identifies the topics to be addressed.

STEP 3 {WHERE}: — Review Existing Codes and Standards

Identifies where general LID topics are found in codes and standards, and how to perform a gap analysis to determine where changes are needed.

STEP 4 {FILL THE GAPS}: — Amend Existing Codes and Develop New Codes

Describes the site analysis process and how to translate that process into codes and standards by filling in the gaps in existing codes and standards or presenting recommendations for new codes and standards.

STEP 5 {REVIEW & ADOPT}: — Public Review and Adoption Process

Explains the importance of identifying and engaging stakeholders early in the adoption process, presents a general overview of the code modification process, and reviews the timing and steps in the public review process.

STEP 6 {IMPLEMENT}: — Ensure Successful Implementation

Discusses the necessity of ongoing training and education and identifies maintenance procedures for LID facilities.

RESOURCES

APPENDICES

Provides citations to additional information on LID and model ordinances to use in the code and adoption process.

Introduction

{Why LID?}

WHO

Why LID?

Why Integrate LID into Codes?

This chapter provides background on LID, including what LID means, why it is the best way to manage stormwater, and the key judicial and regulatory decisions that have resulted in LID becoming a requirement in the NPDES municipal general stormwater permits for Western Washington. To ensure that local governments meet the new requirements, a systematic review and modification of policies and regulations to integrate LID into the development process will be required.

Why Review Codes

In order to meet the requirements of the National Pollutant Discharge Elimination System (NPDES) permit to integrate LID into their existing codes, rules and standards, jurisdiction staff need to look beyond just amending their stormwater code. Because the full implementation of LID requires both stormwater and land use code approvals, it is important to ensure that existing codes, such as landscaping, parking, or the building codes, do not preclude or create a barrier to the use of LID.

Low Impact Development Defined

From the Department of Ecology's Phase I Municipal Stormwater Permit Appendix 1 - Minimum Technical Requirements for New Development and Redevelopment, preliminary draft LID requirement language released May 16, 2011:

> **LID Definition:**
> "**Low-impact development (LID)** is a stormwater and land use management strategy that strives to mimic pre-disturbance hydrologic processes of infiltration, filtration, storage, evaporation and transpiration by emphasizing conservation, use of on-site natural features, site planning, and distributed stormwater management practices that are integrated into a project design.

The primary stormwater management objective for LID is to match pre-development forested hydrologic condition (or prairie condition if historic records indicate that as the native condition) over the full range of rainfall intensities and durations. In addition, it can provide water quality benefits.

The goal and flow control objective for LID are achieved through the following site design objectives. In the *2005 Low Impact Development Technical Guidance Manual for Puget Sound,* the site design objectives are grouped into four basic elements that constitute a complete LID design.

1. Conservation Measures

- Maximize retention of native forest cover and restore disturbed vegetation to intercept, evaporate, and transpire precipitation.
- Preserve permeable, native soil and enhance disturbed soils to store and infiltrate storm flows.
- Retain and incorporate topographic site features that slow, store, and infiltrate stormwater.
- Retain and incorporate natural drainage features and patterns.

2. Site Planning and Minimization Techniques

- Utilize a multidisciplinary approach that includes planners, engineers, landscape architects and architects at the initial phases of the project.
- Locate buildings away from critical areas and soils that provide effective infiltration.
- Minimize total impervious surface area and eliminate effective impervious areas.

3. Distributed and Integrated Management Practices

- Manage stormwater as close to its origin as possible by utilizing small scale, distributed hydrologic controls.
- Create a hydrologically rough landscape that slows storm flows.
- Increase reliability of the stormwater management system by providing multiple or redundant LID flow control practices.
- Integrate stormwater controls into the development design and utilize the controls as amenities—create a multifunctional landscape.
- Reduce the reliance on traditional conveyance and pond technologies.

Effective Impervious Area (EIA) is defined on page 27.

4. Maintenance and Education

- Develop reliable and long-term maintenance programs with clear and enforceable guidelines.
- Educate LID project homeowners and landscape management personnel on the operation and maintenance of LID systems and promote community participation in the protection of those systems.

FIGURE 1
conventional development compared to LID design

Hydrology 101

The important differences between the natural water cycle and urban water cycle are illustrated in Figures 3 and 4.

Under natural, forested conditions, the majority of precipitation infiltrates, evaporates and is taken up by vegetation. Very little precipitation becomes surface runoff. The natural water cycle relies more on vegetation and infiltration to manage stormwater, replenish groundwater and maintain year round water levels in streams and rivers. With the loss of vegetation, the urban water cycle increases runoff, provides less infiltration, produces greater fluctuation in stream and river water levels, and increases stream temperature.

FIGURE 2
water cycle pre-development

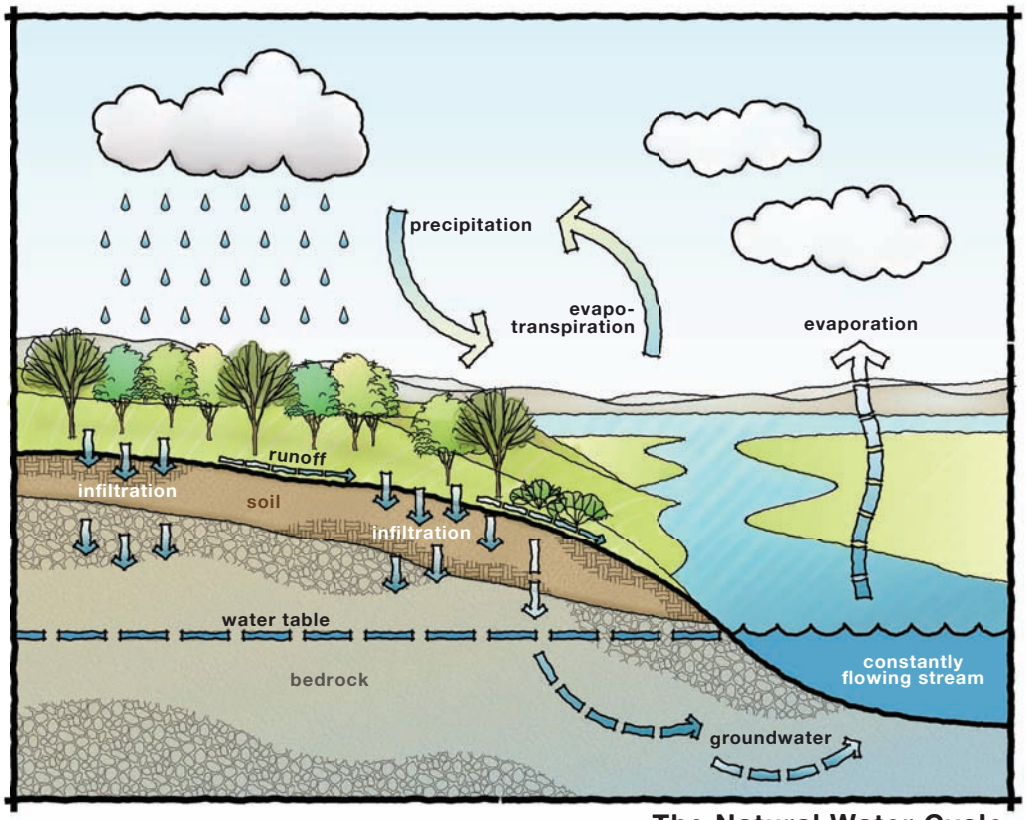

The Natural Water Cycle

FIGURE 3
water cycle post-development

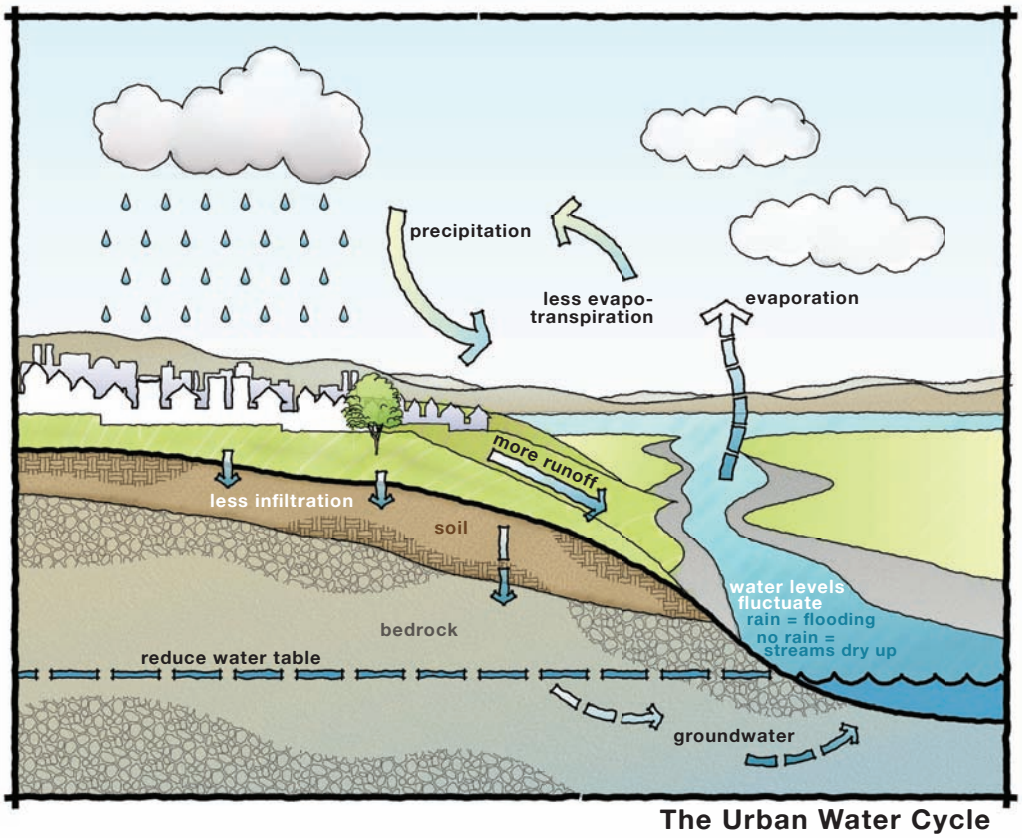

The Urban Water Cycle

Best Way to Manage Stormwater

Because the LID approach manages and treats stormwater close to its source, it surpasses conventional stormwater management techniques by reducing both environmental impacts and infrastructure costs. By more carefully siting buildings, minimizing effective impervious areas, and infiltrating runoff, LID helps to preserve wildlife habitat, decrease stormwater runoff and prevent erosion that can destroy aquatic systems.

FIGURE 4
parking lot
bioinfiltration swale
Lacey, WA

LID facilities can serve as amenities, adding both aesthetic and financial value to developments. In addition, LID techniques are a good way to protect water quality by removing pollutants.

LID does not take the place of good land use planning. It is important that the use of LID occur within the larger framework of Growth Management Act (GMA) and in codes related to protection of critical areas, shorelines, and flood plains. One should understand that there are areas where LID techniques relying on infiltration are not a good choice for stormwater control, such as those areas adjacent to steep slopes and in areas with high groundwater.

Potential Cost Savings

As conventional stormwater infrastructure becomes more costly and the value of land required for these facilities appreciates, LID becomes a more attractive stormwater management option.

The EPA, the North Carolina State University Extension, and others have compared the design and construction costs of LID designs and those employing standard urban stormwater management practices. Those studies found significant cost savings for projects using LID practices. Generally, for the smallest projects, the savings were nominal. For larger projects, the cost savings tended to grow. ECONorthwest has done a good literature review of the economics of LID.

A list of resources can be found in the Appendices of this guidebook starting on page 77.

FIGURE 5
an example of using LID to manage stormwater

Potential cost savings of using an LID approach include reduced investment in conventional stormwater infrastructure, reduced maintenance costs associated with complex stormwater systems, and reduced costs associated with environmental cleanup of water bodies impacted by polluted stormwater runoff. LID can also help protect local economies and jobs by protecting water quality.

LOCAL GOVERNMENTS COVERED UNDER PHASE I OR PHASE II NPDES PERMITS

This guidebook is intended for two types of local governments in the Puget Sound region: those that are covered by an NPDES Municipal Stormwater General Permit and those not currently covered.

Background

While to date, LID has been encouraged, and even required by some local governments in the Puget Sound region, it may be a completely new approach for other jurisdictions. This section provides background information on the regulatory and judicial decisions that led to LID being required in NPDES permits. Information is presented on why LID is the preferred approach to managing stormwater, and why those local governments not currently covered under an NPDES Municipal Stormwater General Permit may wish to require the use of LID practices.

FIGURE 6
flow control system at *Highpoint, West Seattle, WA*

NPDES Requirements

The federal Clean Water Act, as amended in 1987, requires that municipal separate storm sewer systems (MS4s) which collect stormwater runoff and discharge it to surface waters have NPDES permit coverage. As the delegated authority by the US EPA, Ecology develops and administers NPDES permits in Washington State.

Issuance of NPDES permits has been divided into Phase I, which apply to municipalities with populations of more than 100,000, and Phase II, which apply to smaller communities. Phase I and Phase II permits, which were last issued in January 2007 and modified in June 2009 to implement the outcomes of appeals to the Pollution Control Hearings Board (PCHB) decision, are set to be reissued in July 2012.

Pollution Control Hearings Board Ruling

In August 2008 and February 2009, the PCHB ruled on the Phase I and Phase II NPDES Municipal Stormwater Permits, respectively. Among many conclusions, the PCHB ruled that the Phase I Permit did not achieve the standards of "maximum extent practicable" (MEP) found in the Clean Water Act and "all known and reasonable treatment" (AKART) found in the Washington State Water Pollution Control Act. The Phase I decision directed Ecology to modify the permit to require LID where feasible.

The PCHB Phase I ruling noted that permit provisions that only encouraged LID were insufficient to meet MEP and AKART standards. The Board ruled that the Phase I Permit must be modified to require the use of LID where feasible. Because of this ruling, Phase I permittees in Western Washington will require new developments to implement LID where feasible.

In 2009, the Board ruled on the Phase II permit. Due to varying technical and financial resources of Phase II communities, the ruling concluded that rather than requiring Ecology to modify the existing permit to require LID where feasible, Ecology should prepare Phase II permittees for future permit requirements and permittees should:

> "Identify barriers to implementation of LID and identify actions taken to remove those barriers, to establish goals regarding the future use of LID, and to require other specific actions on reasonable and flexible time frames, both during this permit cycle and in anticipation of future permits."

For cities and counties in Western Washington covered by the NPDES Municipal Stormwater General Permits, the LID requirements and feasibility standards adopted must meet the minimum requirements outlined in the appropriate

The Phase I and Phase II NPDES Permits for Western Washington contain technical (e.g., site and engineering constraints) and non-technical (e.g., competing needs) criteria describing instances where LID is considered not feasible.

permit and referenced stormwater manuals. This guidebook provides the road map for reviewing codes and standards for compliance with the permit. Cities and counties not covered by an NPDES Municipal Stormwater Permit are encouraged to use this guidebook to amend their codes as well.

Ecology LID Standards

In 2009 and 2010, Ecology assembled two working groups of stakeholders to provide guidance for new NPDES permit language that would respond to the directives in the PCHB decisions. Central to this endeavor were:

- Establishing applicability criteria;
- Establishing performance standards for LID practices in combination with conventional stormwater management practices; and
- Establishing criteria for determining when LID is not feasible.

In 2012, Ecology will be reissuing Phase I and Phase II permits. Public comment on the formal draft permit is expected in fall 2011.

LOCAL GOVERNMENTS NOT COVERED UNDER PHASE I OR II NPDES PERMITS

Reduced Environmental Impacts and Potential Cost Savings

For those communities not covered under Phase I or II NPDES permits, LID remains the preferred approach for managing stormwater. By managing stormwater in small-scale, distributed facilities, the flooding effects to downstream properties from flash storm events are minimized. Moreover, by managing stormwater close to where it falls, modification to the hydrologic cycle is minimized.

- The LID approach often results in infrastructure cost savings when compared with traditional catch basin, pipe, and pond strategies.
- Bioretention, the workhorse of LID, is an enhanced stormwater treatment method. These features result in flow control, additional landscaping, habitat, the enhanced ability to remove metals, petroleum products and other pollutants from stormwater, and ultimately increased economic value.
- The use of natural features, such as landscaping, results in increased habitat areas.
- The use of the LID approach helps meet the Federal Emergency Management Agency Biological Opinion (FEMA's BIOp) requirements and objectives.

- The LID approach helps to avoid costly clean up efforts such as TMDLs, stream and wetland rehabilitation, shellfish restoration, and sediment cleanup.
- LID helps protects local jobs involved in the shellfish and other aquatic-based industries.

The *LID Technical Guidance Manual for Puget Sound* is a good source for more detailed descriptions of the performance of LID techniques and how they can help protect and restore community environmental values.

Use of Incentives

Incentives can be an effective approach to encouraging LID for those local governments not covered under NPDES or not inclined to require LID. Incentives may include reduced stormwater and/or application fees, expedited project review and approval, departures from specific development standards (e.g. density, lot size, setback reductions, etc.), property tax reduction for a given period of time, and stormwater facility size reduction if minimum thresholds are met.

The Partnership identified several incentives to consider during its regulatory assistance project in 2005-2009. This document can be found at the following link: http://www.psp.wa.gov.

Why LID?

{WHO}

WHAT

Step One 1
{WHO}

Assemble the Project Team

Whether a jurisdiction is required to adopt LID standards under an NPDES permit or chooses to require LID because of the benefits for doing so, assembling the right project team to address code and standard changes is the critical first step in the process. This chapter provides a general discussion of the key internal and external project team participants who should be involved in the modification process to integrate LID in codes and standards.

Make the Project Team Comprehensive

It is important to assemble an inclusive and comprehensive project team of local government staff and public safety personnel. This approach ensures that the concerns of individual departments are identified and addressed early in the process, before moving forward to the review, adoption, and implementation phases.

FIGURE 7
internal staff meeting

As the team vested with the responsibility to amend the codes and standards is established, local governments should consider identifying a project lead that will carry the amendment package through the adoption process. The project lead should be someone who will have active involvement in writing or implementation of the updated standards and who has the authority to establish a project schedule and delegate responsibilities across departments. The project lead should also be sufficiently familiar with LID to be able to assemble the necessary materials to bring the remainder of the project team to an appropriate level of understanding and mastery.

In addition, it is important to understand that the department that is the primary driver in the amendment and adoption process may change as the process moves forward. It is not uncommon for planning to take the lead on preparing the code amendments with public works and public safety staff later taking over as the regulations are translated into project review, maintenance, and enforcement standards.

Key Internal Participants

Key internal participants should include staff from public works, planning, building, and fire and public safety departments. Each jurisdiction has its own departmental organization and responsibilities, so the following graphics are intended only for illustrative purposes. Smaller jurisdictions may likely combine many of these functions into a single position.

PUBLIC WORKS

Public works staff should include those involved in development review of stormwater, street, and grading and site work proposals, as well as those who work on municipal facilities such as streets and public buildings. Maintenance staff play a critical role on the project team because they will likely be providing ongoing maintenance of public LID facilities, and possibly inspecting and enforcing private facilities. These responsibilities make maintenance personnel particularly well suited to reviewing the codes for the omissions that may cause later problems.

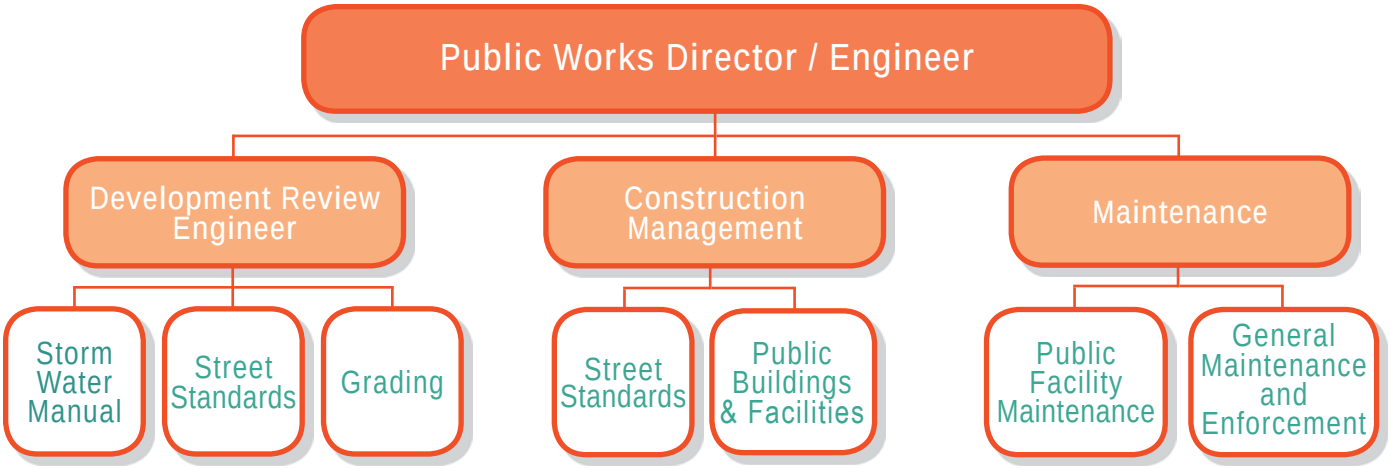

PLANNING

By being involved in development review and policy development, planning department staff are an integral part of the project team, and may even serve to initiate and facilitate the process depending on the internal structure of the municipal organization. The responsibility to prepare new ordinances and amendments is often conferred upon planners, as is the role of assembling supporting studies and other documents used during the adoption process. Planning department staff may also play a key role in educating decision makers and the public after adoption.

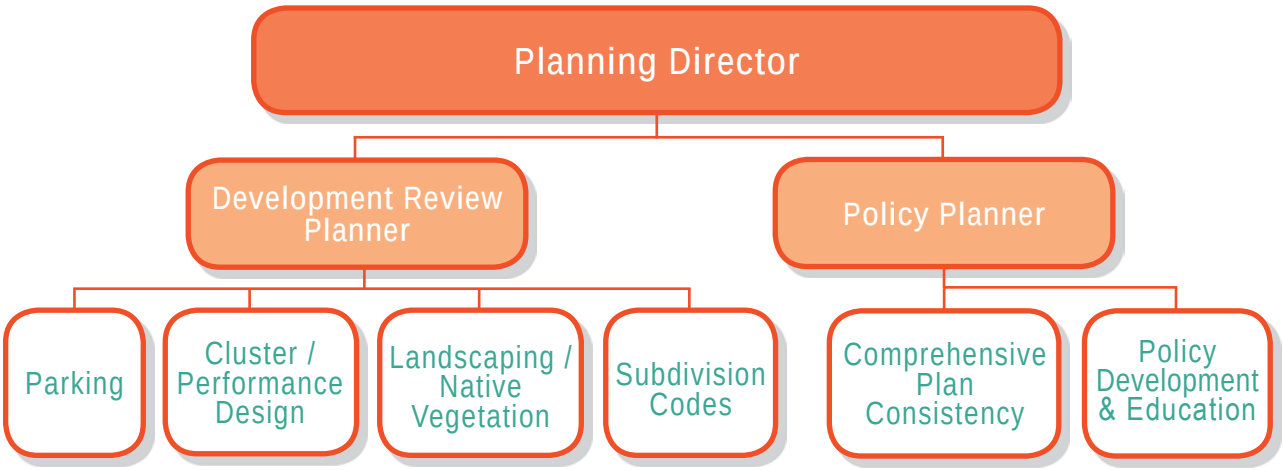

FIRE AND PUBLIC SAFETY

Fire and public safety staff are concerned about street widths, access for emergency response, street layout within subdivisions, and street surfacing materials.

BUILDING DEPARTMENT

Finally, building department staff, who may review plans for green roofs, minimal excavation foundations, and rainwater re-use systems should be included on the project team and brought up to speed on the latest approaches and technologies.

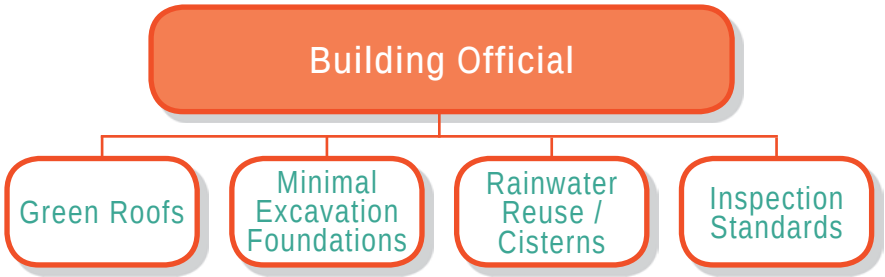

OTHER PARTICIPANTS

In addition to the four departments described above, it is often useful to have representatives from the jurisdiction's elected officials, such as council or commission staff, as well as the city manager or executive's office involved in the process early to make the adoption process smoother.

Natural resources staff can make good advocates for LID, as well as providing an important function in making sure that there are no conflicts between proposed LID practices and critical areas codes.

Staff from parks departments can be an excellent source for examples of LID practice implementation, LID projects and experience with maintaining LID facilities.

Key External Participants

The project team should also include key external participants whose involvement is necessary for a smooth process of change to codes and standards, and subsequent successful LID implementation. Such participants include health departments, utility providers such as water and sewer, and agencies owning and maintaining streets such as state and county departments of transportation.

Health departments will be interested in ensuring that water reuse systems meet state and local health codes, as well as ensuring that the placement of LID facilities in relation to septic systems is done properly. Utility purveyors will have an interest in how the stormwater infiltration may affect underground pipes and cables. Any amendments to utility setbacks and crossing standards related to LID practices may also require discussion and agreement.

Other external participants that have a stake in the outcome of code amendments, but who may not need to be part of the project team, include major property owners or developers, regional governments, citizen's groups, environmental groups, and special districts. It would be useful to seek the input of developers and outside design consultants at the appropriate time, such as after the project team has developed draft material that is ready for external review.

Bringing the Project Team Up to a Common Level of LID Understanding

Each project team participant may have a different level of knowledge of LID at the project outset. To facilitate an effective amendment process, the project team should be brought up to a common level of understanding. Achieving this helps to establish early buy-in on overall objectives, and it will establish a context from which decisions are made. Ideally, this understanding will also reduce the potential for discussions and proposals being postponed until later in the process.

The amount of LID training required depends on the team member's role. For most staff, an LID PowerPoint presentation should be sufficent to get started, while LID project leads should seek more formal training opportunities.

There are a variety of excellent local resources in the appendix to deepen staff's understanding and mastery of LID.

The *LID Technical Guidance Manual for Puget Sound* is an excellent resource for describing LID practices to both technical and non-technical audiences. In addition to describing non-structural and structural practices, maintenance, cost, and practical design considerations are presented.

The ***University of Washington Professional & Continuing Education*** offers certification in Low Impact Development. This certificate program is a three quarter offering that includes an examination of the legislative authority for stormwater management and LID, the design of LID practices, and strategies and lessons for maintenance and implementation.

The ***Washington State University Extension / Puget Sound Partnership*** offers a series of two-day workshops that also lead to a certificate. This program is practical in nature and includes sessions on bioretention, permeable paving, green roofs, minimal excavation foundations, rainwater collection systems, site planning and inspection.

As noted earlier, several studies have been published regarding the difference in cost between LID designs and standard urban stormwater management facilities, and are summarized in the literature review of the economics of LID prepared by ***ECONorthwest***. The ***Environmental Protection Agency*** prepared the most comprehensive study. That study found that all but one project employing LID was less expensive than its counterpart that used conventional practices. Moreover, for the one project where LID was deemed more expensive, the authors failed to include the purchase and development of an off-site stormwater management facility. This omission meant that all of the LID designs were less expensive than designs with standard urban stormwater management practices.

In addition, there are valuable resources involving better site planning by the ***Center for Watershed Protection***, permeable paving by ***Bruce Ferguson***, and green roofs and living walls by ***Nigel Dunnett*** and ***Noel Kingsbury***.

The Appendix includes citations to the sources noted above.

WHO

{WHAT}

WHERE

Step Two 2
{WHAT}

Understand General Topics to Address

Once the project team is assembled and a common level of understanding of LID is established among the participants, the next step is to establish a work program that includes the topics to be addressed by the team. Key staff from planning, public works, building, and fire and safety may be assigned tasks that could include summarizing existing standards and provisions, and providing examples or suggestions for how these standards and provisions may be modified under an LID approach.

This section discusses the primary regulatory and policy areas where LID may be addressed and integrated. Under each topic below, a general discussion is provided regarding the challenges and opportunities for LID integration and what an LID approach typically entails for the review and amendment of codes and policies.

Site Planning and Assessment

As noted in the *LID Technical Guidance Manual for Puget Sound*, existing conditions on a site strongly influence the extent and location of development for a project using LID. It is important to realize that designers of projects that use LID will need to understand site hydrology, soils, and other features in the initial site assessment and planning phases of the project. This in turn will drive how clearing and grading of the site is done, as well as the final locations of building, parking areas, and other site features. The *LID Technical Guidance Manual* is a very good source for understanding how site planning and assessment function when using LID.

Design buildings, parking areas and streets to minimize site grading preserves natural watercourses, native vegetation and soils on a site.

Healthy Soils

In addition to nourishing plants, soil performs valuable functions for absorbing and treating stormwater. These functions are compromised through development when soil is removed or compacted. Protecting and restoring healthy soil is essential to protecting the waterways and salmon and the way of life in Western Washington.

Appendix 1 of the Municipal Stormwater Permit requires a minimum soil quality and depth in all lawn and landscaped areas. BMP T5-13

Ecology's *Stormwater Management Manual for Western Washington,* the *LID Technical Guidance Manual for Puget Sound*, and the *Soils for Salmon* website offer great resources for healthy soils where standards do not exist in local codes. References to these are included in the appendix.

Landscaping, Native Vegetation, and Street Landscaping

Landscaping in the form of trees, shrubs and ground cover provides important LID functions such as rainwater interception, rainwater uptake, and removal of pollutants, in addition to providing site and community aesthetics, economic value to properties, and wildlife habitat.

Native vegetation species are well adapted to seasonal changes, particularly the extremes of the Pacific Northwest's wet winters and dry summers. Often local codes do not have native vegetation well defined, nor do the regulations provide strong enough requirements for native vegetation retention.

FIGURE 8
landscaping examples
photo on the right provided by CamWest Development

Local governments may also struggle with how much retained or re-established native vegetation is reasonable. Another common obstacle is that many landscape codes do not allow for landscaping within LID facilities to be counted towards site, parking, or perimeter screening requirements.

An LID approach to landscaping does not necessarily require more vegetation than conventional landscaping requirements, but rather emphasizes native vegetation retention and native soil conservation as a means to manage stormwater effectively during both the construction and occupancy phases. Such an approach would also allow vegetation planted within LID facilities, such as bioretention swales,

rain gardens and green roofs to count toward landscaping requirements. The use of drought tolerant plantings is a good way to ensure the survival of landscaping without additional irrigation during the summer.

Native vegetation retention is probably the least expensive way to meet LID stormwater goals because natural site amenities may be used to disperse, store and infiltrate stormwater.

Impervious Surface Standards

Minimizing stormwater-generating impervious surfaces is a basic component of LID. Impervious surfaces are associated with structures, parking, streets, and site development.

There are two types of impervious surfaces. **Total Impervious Area (TIA)** is any surface created by humans that cannot be penetrated by water easily or effectively, thereby resulting in stormwater runoff. Examples of TIA include pavement (asphalt, concrete, etc), buildings, driveways, parking lots and sidewalks.

Effective Impervious Area (EIA). EIA is a subset of TIA and is often used in stormwater manuals, critical areas ordinances, and FEMA's biological opinion. EIA is defined in the Stormwater Management Manual for Western Washington as impervious surfaces that are connected via sheet flow or discrete conveyance to a drainage system. Impervious surfaces on residential development sites are considered ineffective if the runoff is dispersed through at least one hundred feet of native vegetation and meet the criteria of BMPT 5-30.

Hard surfaces are permeable pavements, impervious surfaces or vegetated roofs. Ecology replaced the use of impervious surfaces in the preliminary draft LID language for the permit. Because Ecology is as concerned about ground water pollution as surface water; and because it wants to maintain the same regulatory control over water quantity, the same square footages of "hard surfaces" as "impervious surfaces" are used to trigger minimum requirements. Though permeable pavements should result in less surface runoff, there is an increase of the amount of water potentially discharged to the ground. Hard surfaces can be impervious or permeable. Permeable pavements are pervious surfaces, but also hard surfaces.

Code requirements and standards that can be examined to reduce the amount of hard and impervious surfaces include maximum impervious surface or site coverage standards, parking requirements, street standards, and construction standards. Codes and standards should be amended to require the use of

permeable surfacing where site and soil conditions make it feasible. While hard and impervious surface areas will occur on sites within an urban context, reducing EIA through cluster site design, infiltration where rainwater falls, and disconnecting hard and impervious surface areas are proven methods for reducing stormwater impacts.

Dimensional Standards

Standards that apply to the size, form, and placement of structures may affect the integration of LID into a development.

Some local codes have rigid bulk and dimensional standards (e.g., setbacks, height limitations, etc.), which may result in new and existing development being unable to minimize site disturbance and fully integrate LID into site design. An LID approach to dimensional standards allows greater flexibility in site design so that less native vegetation and soils on the site are disturbed, building and road footprints are minimized, and stormwater can be managed in small-scale, distributed facilities across the site.

FIGURE 9
flexible lot configurations

Establishing flexibility in setbacks and building height, as well as clustering of structures, is an effective way to minimize the footprint of the development thereby conserving vegetation and minimizing modification to the hydrologic cycle.
In addition to flexible bulk and dimensional criteria, incentives can provide further LID integration. Popular incentives include density bonuses for residential development and allowing greater flexibility in dimensional standards.

Clearing and Grading Standards

The clearing and grading of a site may have a major impact on the site's capacity to manage stormwater using LID techniques. Native vegetation and soils, and natural topographical site features, such as small depressions, that help to slow, store, and infiltrate stormwater should be preserved. Clearing these features from a site reduces the potential for effective management of stormwater using LID.
Clearing and grading regulations should emphasize minimizing site disturbance and

FIGURE 10
site work
Pierce County, WA

protecting native vegetation and soils, and should complement other regulations such as native vegetation retention and dimensional standards that affect overall site design.

It is very important to ensure that clearing and grading does not degrade LID techniques that will be expected to infiltrate stormwater, such as bioretention and permeable pavement. If clearing and grading activities transport fine sediment to these areas or other forms of degradation, the infiltration areas must be restored so they will function as designed.

Regulations should also emphasize equipment for clearing and grading activities. This should be included in site development permit language. Equipment should be sized properly for the job to minimize soil compaction and site disturbance. Lastly, clearing activities should be tied to the final development plan to ensure efficient sequencing of construction phases and minimal site disturbance.

Engineering and Street Standards

Streets and parking lots comprise a significant portion of the EIA in urbanized areas. Engineering standards, including those that detail street sections, sidewalks, and driveways should emphasize minimizing EIA. Reducing excessive travel width and using pervious paving are two techniques for minimizing the impervious surfaces associated with streets.

Lane widths often are larger than the minimum necessary for providing safe access for larger vehicles, particularly on local access streets. There may also be opportunities for reducing effective impervious areas associated with driveways by minimizing driveway width and curb radii, designing shared driveways, or providing different options for surfaces.

FIGURE 11
street section example with sidewalk on both sides

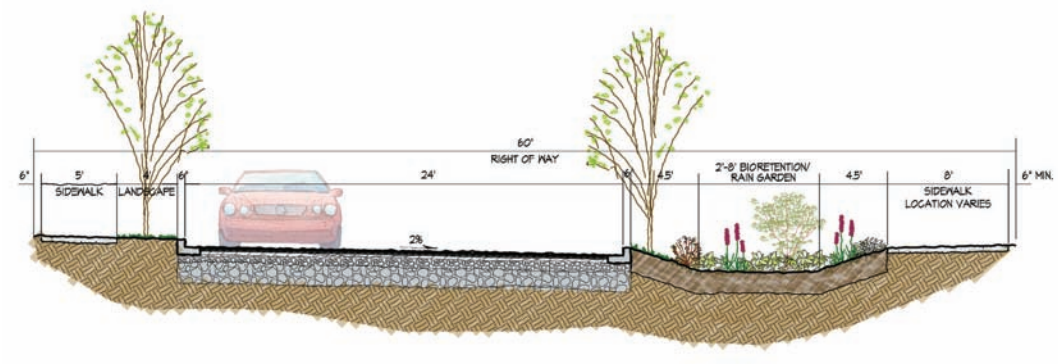

Requiring pervious pavement for driveways, sidewalks, parking lanes, parking lots, and other low traffic street areas is necessary to reduce the total EIA of these uses in a meaningful way. Integrating LID features such as bioretention into the right-of-way is a good option to reduce and manage stormwater flows from street surfaces. For NPDES permitees, this may be required where site conditions allow.

Street standards should incorporate LID features, and require their use where feasible. It is important for street standards to work in a coordinated manner with landscaping requirements for street frontages so that the plant material used within street-side bioretention facilities can be counted towards landscaping requirements.

Parking

The area of surface parking is second only to streets for the amount of impervious surfaces in most communities.

There are a number of strategies for reducing the amount of pollution-generating impervious surface associated with surface parking. One such strategy involves reviewing and adjusting minimum parking ratios to ensure that they are not requiring more parking than is needed.

FIGURE 12
parking lot incorporating pervious paving, bioretention & compact spaces
Spokane, WA

Establishing maximum parking ratios is another effective strategy, particularly for those uses that tend to provide parking to meet peak annual demand, such as during holidays. Using pervious pavement in parking areas where feasible is a practice that greatly reduces stormwater runoff.

Standards for parking space dimensions should also be reviewed. While many local codes allow for a certain amount of "compact spaces," which typically involve a narrowing of the parking space, there often remains an opportunity to reduce the length of parking spaces. Since the full length of parking spaces is rarely used even in "standard" spaces, reducing the length of a standard space can have a potentially large impact on reducing the overall area of the parking lot.

The design standards for parking lots should also be reviewed to ensure that they do not present barriers to LID. Design standards should accommodate integration of LID features such as rain gardens, filter strips, bioretention swales, and filter boxes. Provisions that facilitate and encourage retrofitting of parking lot stormwater

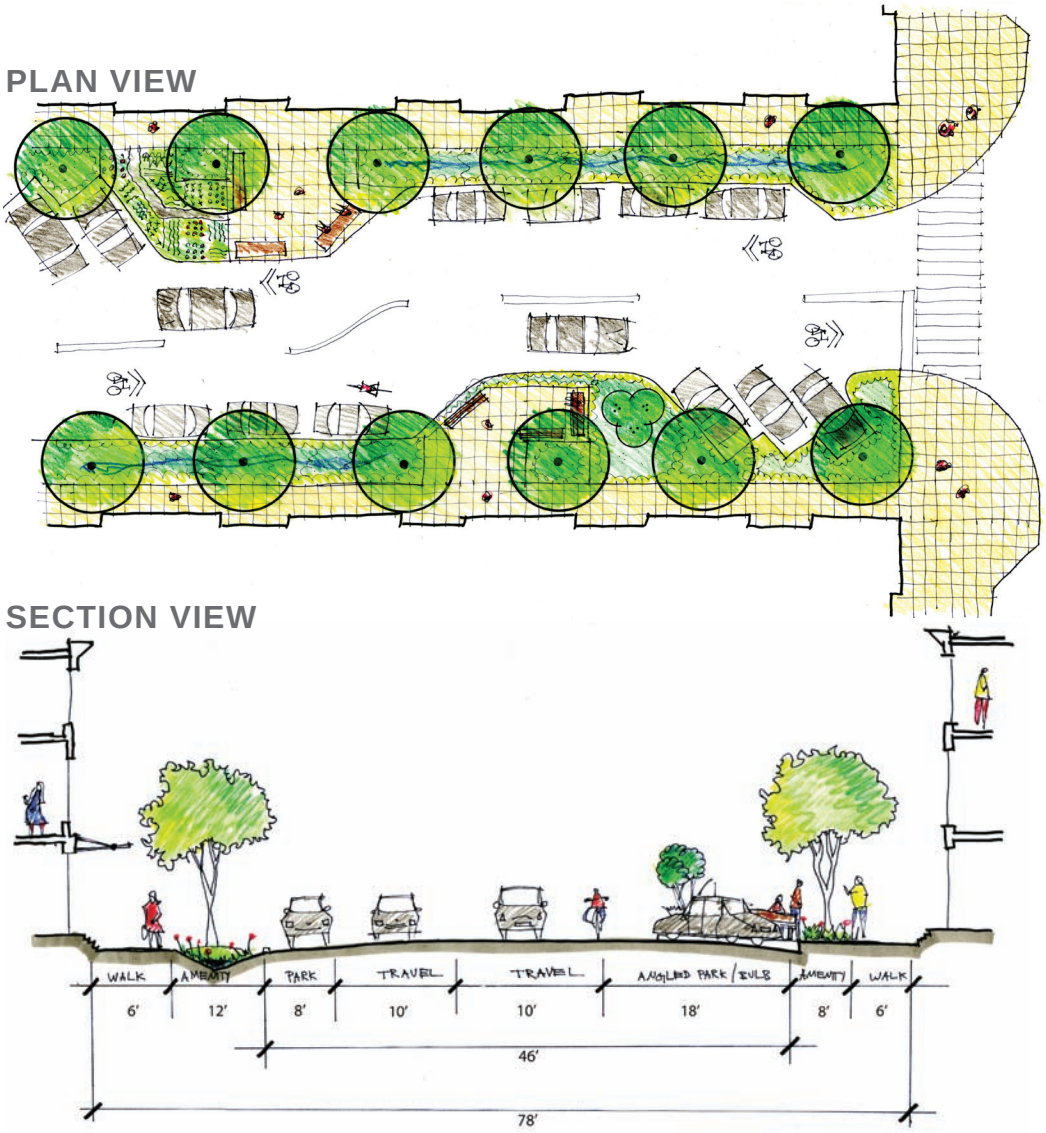

FIGURE 13
example of design flexibility allowing LID components along with a pedestrian focus

systems should also be considered. Other design standards affecting parking lot design such as landscaping, pedestrian circulation, and parking lot placement, which are found often within zoning codes, may also need to be examined to ensure that the requisite flexibility is built in to facilitate the use LID practices.

Design Guidelines and Standards

Design guidelines and standards may address a broad range of building and site design elements. It is important to review these standards and guidelines to ensure LID can be required unless infeasible.

For example, in urban commercial areas, a common objective may be to enhance the pedestrian environment by strengthening the building-street relationship, such as locating the building at the edge of the sidewalk and then siting parking behind buildings.

Other examples might include certain pedestrian character or design aesthetic guidelines that require a certain street tree species for boulevard landscaping. It may be that the species specified is incompatible with the use of the landscaped area for bioretention. Other species may provide a similar aesthetic quality and pattern along the streetscape while being compatible with variable moisture conditions typical of bioretention.

Stormwater Management and Maintenance

Good sources for maintenance practices:

- *Low Impact Development Guidance Manual for Puget Sound*
- *Seattle Public Utilities Natural Drainage Systems*

Just as with conventional structural stormwater systems, LID facilities need to be properly designed, constructed, and maintained to ensure they perform as designed. This requires staff involved in project review and regulatory enforcement to be trained on LID systems. Staff should

FIGURE 14
examples of stormwater facility maintentance, conventional vs. LID

CONVENTIONAL

LID

have knowledge of the components of the LID design and understand maintenance practices and frequency.

To maintain the benefits of LID facilities over time, clearly written maintenance specifications and protection mechanisms need to be put in place. Maintenance and enforcement procedures should be reviewed and modified periodically. Maintenance provisions are usually contained in the stormwater management manual or engineering design standards. Existing maintenance standards may include only the practices associated with standard urban stormwater management facilities. As such, new language may need to be prepared to cover LID practices.

Inspection of LID facilities should occur regularly to ensure they are performing and that adjacent property owners have not modified them in any way. Some mechanisms for protection include dedicated tracts, conservation and utility easements, homeowner association covenants, and title restrictions.

Education of adjacent property owners through direct outreach, and educating the public using signage and other means is critical to ensuring that LID facilities are not altered. Education also encourages individuals to take ownership and help maintain the facilities.

Subdivision and Planned Unit Development

In some jurisdictions, subdivision standards may pose impediments to the use of LID practices. Subdivision standards may stipulate percentages of the overall site that must be retained as open space. Sometimes uses are ascribed to the open spaces such as the need to accommodate active or passive activities. Integrating LID into subdivision codes can allow designers to count bioretention areas, dispersion areas, and other conserved open space to be counted towards passive open space standards. In some instances, subdivision standards may also require curb and gutter for all new streets. This standard should be changed to require broader application of LID practices. Examples of standards for LID curb cuts are provided in Step 4.

In other jurisdictions where subdivision standards mostly mimic the procedural requirements of the State Subdivision Code (RCW 58.17), special care should be taken to review local planned unit development (PUD) chapters. PUD chapters often embody many of the challenges ascribed to subdivision codes above.

Planned Unit Developments (PUDs), which may be known by a variety of names, typically allow for flexibility with the strict application of zoning standards in exchange for other amenities. The most typical exchange is an allowance for the flexibility to cluster uses in exchange for increased open space. PUDs allow both the developer and jurisdiction flexibility in designing projects in a manner that increases opportunities to employ LID practices.

Critical Areas and Shoreline Management

Regulations affecting critical areas, shorelines, and other sensitive areas may preclude some LID practices. Local governments should consider requiring LID practices in or adjacent to these areas only where other standard urban stormwater management practices are permitted.

Well-designed and well-functioning LID facilities situated outside buffer areas are likely to have minimal impact on sensitive areas and may even enhance them.

Since these types of regulations are based on best available science as established by state guidelines, local governments may not have much leeway in making modifications. However, the goals and approaches of LID are consistent with the protection of critical areas. Adding specific guidance for LID within critical areas regulations helps to ensure that the functions and values of these areas are not impacted. In addition, it increases the understanding that developers, engineers, planners, and landscape architects will have of the relationship between critical areas and stormwater when designing projects.

Shoreline management regulations, and other regulations set up to protect natural resources and assets should be reviewed to ensure they do not include unnecessary barriers to the use of LID. In no instance, however, should LID practices be used to substantiate buffer reductions that would not otherwise be allowed using standard urban stormwater management practices.

FIGURE 15
example of wetland protection

WHAT

{WHERE}

FILL THE GAPS

Step Three 3
{WHERE}

Review Existing Codes and Standards

Once a local government's project team identifies what should be addressed under an LID approach, the next step is to determine where changes need to be made to integrate LID fully into a jurisdiction's policies, regulatory code, and standards. This step discusses the basis for performing a gap analysis of codes and standards to determine where changes are needed for LID integration. This step provides a discussion of the major topics that should be reviewed during the LID integration process and shows where these topics are typically found within development controls.

No two municipal codes are integrated in the same manner. As an example, parking lot landscaping may be discussed in an off-street parking chapter in one jurisdiction's code and the landscaping chapter in another jurisdiction's codes. Still others may stipulate the amount of landscaping in an off-street parking chapter and the type/size of the required plantings in a landscape chapter. Consequently, the review of existing codes and standards is presented topically with notation as to the locations where each topic may likely be found.

These major topics include the following:

- Comprehensive Plan Goals and Policies
- Zoning Code
    - Landscaping, Native Vegetation, Tree Protection, and Open Space
    - Impervious Surface Standards
    - Bulk and Dimensional Standards
    - Site Plan Review
    - Parking

- Development Code and Standards
    - Clearing and Grading Standards
    - Engineering and Street Standards

Perform Gap Analysis and Review

COMPREHENSIVE PLAN GOALS AND POLICIES

Comprehensive Plan goals and policies provide an important means of supporting any changes made to incorporate LID into a jurisdiction's regulatory structure. It is important to review these goals and policies to make sure that they do not provide a barrier to using LID, and that they provide support for the use of LID. Goals and policies that could affect how LID is integrated into regulation can be found in each element of the Comprehensive Plan. For example, there may be policies in the transportation element that call for all streets to have curb and gutter, which should be amended to require an LID approach in street design, while policies can be added to the land use element that encourage the dual use of site landscaping for LID and screening purposes.

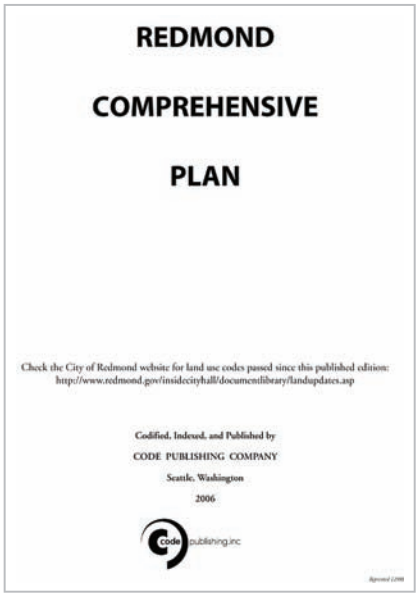
REDMOND

COMPREHENSIVE

PLAN

Check the City of Redmond website for land use codes passed since this published edition:
http://www.redmond.gov/insidecityhall/documentlibrary/landupdates.asp

Codified, Indexed, and Published by
CODE PUBLISHING COMPANY
Seattle, Washington
2006

FIGURE 16
City of Redmond Comprehensive Plan

ZONING CODE

Landscaping, Native Vegetation, Tree Protection, and Open Space

Vegetation is an integral component of an LID approach. Most development codes contain landscaping requirements that are primarily intended to reduce visual impacts and enhance the aesthetic character of development. At a minimum, code

FIGURE 17
parking lot screening using drought tolerant and native plants

FIGURE 18
tree retained at Sehmal Homestead Park
Gig Harbor, WA

sections that address landscaping should be reviewed and amended to support the requirement for LID where feasible. Where appropriate and necessary, changes should be made to landscaping requirements to emphasize native vegetation preservation and require LID practices such as bioretention to be counted toward passive open space requirements.

- *Landscaping and Screening* – Code requirements addressing site landscaping are focused usually on reducing visual impacts (screening) and enhancing site aesthetics. Requirements are often very prescriptive. An LID approach to landscaping requirements emphasizes native vegetation preservation and allows more flexibility for how landscaping is provided and what is counted towards the required landscaping. It also takes advantage of landscaped areas for stormwater infiltration.

FIGURE 19
existing street trees incorporated into bioretention swales
Spokane, WA

- *Open Space and Tree Preservation* – Development codes may have separate tree preservation provisions, or these requirements might be part of the code section addressing landscaping. Tree preservation

codes often focus on preservation of significant or heritage trees (e.g., trees of a particular species, size, or cluster, etc.). Tree preservation requirements typically include tree replacement (e.g., for every one-caliper inch removed from a site, two caliper inches should be replaced, etc.).

The size of existing trees is typically expressed as a measurment of diameter at breast height. Replacement trees are expressed in inch-denominated caliper size or height.

An LID approach puts greater emphasis on the preservation of conifers than other heritage trees because of the ability of conifers to intercept stormwater during the winter months when precipitation is most likely to fall. The LID approach also emphasizes strategies to orient retained vegetation and open space in corridors in ways that will result in the disconnection of impervious surfaces and allow for increased habitat opportunities.

- *Street Frontage Landscaping* – Landscaping requirements for street frontages are found typically in the landscaping section. Such requirements primarily address street trees and do not get very prescriptive about other landscaping found between the sidewalk and the street. An LID approach ensures that street frontage landscaping requirements include LID facilities such as bioretention. It also allows for the dual use of those for areas for both landscaping and stormwater management.

- *Design Guidelines and Standards* – Vegetation requirements are sometimes found in design guidelines and standards. In some municipal codes, these may be integrated into zoning codes while other times they exist as stand-alone documents that are referenced within the code. Design guidelines and standards should be flexible enough to encourage creative LID solutions that meet the intent of the design guidelines.

Impervious Surface Standards

A key component of an LID approach is minimizing impervious surfaces, hard surfaces and reducing or eliminating EIA. This section provides a brief discussion of the typical code sections and standards that should be reviewed with an eye toward reducing impervious surfaces. Standards should also be amended to require the use of pervious pavements where feasible.

- *Parking* – Careful examination of parking requirements can offer tremendous opportunities to effect meaningful reductions in effective impervious area.

- *Street Standards* – Street standards are found usually within a jurisdiction's

FIGURE 20
example of reduced width oneway street and short driveways minimizing impervious surfacing
Issaquah, WA

public works manual or engineering design standards. Given the large proportion of impervious surface that streets contribute, a significant reduction in impervious surface may be achieved through modest reductions in street widths. Often there are opportunities to reduce street widths, particularly on local access streets, while still maintaining safe access and accommodating emergency service vehicles. Pervious pavement should be required on all low traffic streets, including local and collector classifications, unless infeasible under the Ecology permit.

- *Construction Standards* – Construction standards for site improvements (e.g., driveways, walkways, curb and gutter, etc.), are typically found within a jurisdiction's public works manual or engineering design standards. These should be modified to reduce impervious surface. Examples include preparing standards for shared driveways and reducing the minimum driveway width and curb radii to the minimum necessary to provide safe access and accommodate emergency vehicles. Standards should also require pervious pavement for driveways, walkways, and streets. Consult the LID Technical Guidance Manual for Puget Sound for design standards and Ecology's feasibility criteria in the NPDES Municipal Storm Permit.

If you are trying to minimize street width, fire fighting equipment should match the level of development.

- *Design Guidelines and Standards* – Design guidelines and standards provide another way of integrating LID into site and building design by greater flexibility or prescriptive standards. They may be part of the zoning and development code, or exist as stand-alone documents that are referenced in the zoning code. Design guidelines and standards should be flexible enough so that LID is part of site and building design. Guidelines and standards should also provide specific guidance for integrating LID facilities into sites so that they also achieve public amenity objectives.

Bulk and Dimension Standards

Bulk and dimension standards apply to building placement, size and shape (e.g., lot coverage, density, impervious surface coverage, height, etc.). Usually, standards are very prescriptive and do not allow much deviation, which can present barriers to effectively integrating LID into a site. Such standards should be reviewed and modified so the LID approach is used and there is enough flexibility to allow the best design possible. This section discusses where bulk and dimension standards are found typically in codes, and briefly how such code provisions can be modified to accommodate an LID approach.

- *Individual Zoning District Bulk and Dimensional Regulations* – In typical codes each zoning district will have specific dimensional standards that dictate building setbacks, maximum building square footage, density, height, and possibly other elements related to the visual appearance of structures. An LID approach should utilize flexibility for setbacks and heights, and should allow clustering of buildings and minimizing building footprints as an approach to maintain natural hydrologic functions and native vegetation. Increased residential densities may be offered in exchange for reducing impervious surfaces or managing stormwater on-site beyond what is required.

- *Performance Based Designs* – Performance based designs, often called Planned Unit Developments (PUD), allow greater flexibility in code requirements for site and building design than is otherwise permitted in the underlying zoning. In exchange for this flexibility, a jurisdiction may require a greater level of investment in public amenities and open space. In many performance based design chapters, significant emphasis is placed on open space that can be used for recreational purposes. Performance based design chapters can be effective mechanisms for integrating LID to the extent that LID practices are recognized as amenities and can count toward passive open space requirements. Similar performance design chapters for housing products such as cottages, townhomes, and multi-family structures should be examined as potentially effective tools for establishing meaningful native vegetation tracts.

- *Subdivision Standards* – Standards for subdivisions are usually found in a “subdivision” section of a municipal code. Subdivision codes and processes are rooted in state law (RCW 58.17) that addresses the segregation of land. Some jurisdictions have adopted subdivision codes that are primarily procedural in nature. For those jurisdictions, there will be little opportunity or need to amend the subdivision code to integrate LID. In other communities, subdivision codes contain standards that guide the design of new lots (e.g., lot width, amount of open space, cul-de-sac length, curb and gutter requirments, etc.). In subdivision codes

that contain design criteria, opportunities exist to integrate LID. Similar to performance based design codes, subdivision codes can be amended to provide greater flexibility for setbacks, express preferences for clustering, and provide more guidance for integrating LID into common open space and recreation areas, and streets. In addition, subdivision codes should be explicit about how LID facilities are to be maintained.

- *Design Guidelines and Standards* – In many codes there are design guidelines and standards either in the zoning code or as a standalone chapter. These codes are often intended to enhance the visual quality and identity of communities and establish or maintain character. They may include specific goals for building or site design. Modifications to these codes, especially to those codes that address landscaping and site design can help to integrate LID features into a project and help meet two purposes at once.

Site Plan Review

Some jurisdictions have a review process outlined in their permit and approval process codes that requires all elements of a site plan be reviewed and approved on one plan. In the LID approach, it is very important that a detailed initial site inventory and assessment be done early in the process. This is done to provide the baseline information necessary to substantiate design strategies that preserve natural resources, preserve areas most appropriate to evaporate, transpire, and infiltrate stormwater, and to achieve the goal of mimicking the natural hydrologic conditions of the site. The *LID Technical Guidance Manual for Puget Sound* provides a systematic approach to performing a composite site analysis.

FIGURE 21
bioretention swale incorporated into parking lot at Lacey Crossroads
Lacey, WA

Parking

Parking is a major contributor to impervious surface. Any opportunity to reduce the amount of parking in a community can go a long way towards reducing overall effective impervious area.

- *Off-street Parking Regulations* – Off-street parking regulations are usually found within zoning codes and are focused on establishing a minimum number of off-street parking spaces based on specific land uses or zones. Parking construction standards may be found in the same section or may be part of the public works standards. An LID approach to parking first addresses the amount of parking that is built by critically reviewing minimum parking requirements, and then integrating mechanisms for reducing parking requirements (e.g., shared parking, proximity to transit, car share, etc.). Requiring, where feasible, structured or tuck-under parking is another strategy for reducing effective impervious area, particularly within urban areas. Instituting parking maximums for certain uses is an effective strategy for reducing large and underutilized parking areas.

- *Public Works Construction Standards* – Parking lot design requirements are typically found within the zoning code or the public works standards. Examining these design requirements presents another opportunity for reducing impervious surface. Often minimum standards for drive aisles and stall dimensions may be reduced, which taken together can result in significant reductions in impervious area. Parking design standards should be modified to allow flexible design and integration of LID facilities. Pervious pavement should be required where feasible.

Clearing and Grading Standards

Clearing and grading standards affect how a site is prepared for development and play an important role in preserving native vegetation and locating LID features. Such standards may be overly permissive in terms of the amount of clearing and grading that is allowed. Clearing and grading standards should be reviewed to ensure that clearing and grading practices seek to minimize disturbance to native soils and vegetation. They should address protecting LID infiltration techniques, such as bioretention and permeable pavement, and native vegetation and soils during construction. This section discusses the components of an LID approach to clearing and grading and where these approaches would be integrated into a typical code.

- *Fill and Grade Ordinance* – Grading and filling standards are found usually in a local government's municipal code. The successful integration of LID into grading and filling standards should emphasize conserving native vegetation and soils as well as site design strategies that minimize unnecessary contouring of the site and retain existing native vegetation.

- *Clearing Ordinance* – Clearing standards may be integrated into engineering standards, landscaping and tree retention standards, or exist

as a stand-alone document. Under an LID approach, regulations affecting site clearing should emphasize minimizing site disturbance by maintaining native vegetation and soil conservation.

ENGINEERING AND STREET STANDARDS

Streets represent a large proportion of a community's total impervious surface. An LID approach emphasizes reduction in impervious surface. Reducing minimum street widths offers an excellent opportunity to achieve this objective. This section describes where street standards are typically found within local development controls, and how they may be strengthened to implement an LID approach.

- *Street Standards* – Street standards may be integrated into a jurisdiction's engineering standards or they may be standards from Washington State Department of Transportation (WSDOT) or another agency adopted with local amendments. Street standards typically include street sections for a range of arterials, collectors, and local streets. These show right of way widths, travel lane and parking lane width, and location and size of area for sidewalks, landscaping and utilities. Details are included for curbing, stormwater facilities and cul-de-sac designs, among other items.

  LID should be required where possible in street sections. Under an LID approach, reduced street widths and flexibility in meeting design intent should be examined. Street standards should require pervious pavement to be used in a variety of areas, including streets, parking areas and sidewalks, unless infeasible. Standard plans should show options for conveyance using bioretention rather than curb and gutter.

- *Design Standards* – Standards for minimum street width also may be found in the local fire and public safety codes. It is important that any changes to street standards agree with these design standards.

- *Subdivision Code* – In some jurisdictions, right of way widths and design standards for streets are found in the subdivision code where short plats, preliminary plat, binding site plans, and other means of subdividing property are regulated. In some cases changes may need to be made to require for greater flexibility in meeting LID standards.

- *Landscaping and Tree Preservation* – Landscaping and tree requirements may be found in a jurisdiction's zoning code as well as in street sections for street standards. It is important to allow for landscaping to be used for LID, screening, street tree requirements and aesthetics.

WHERE

{FILL THE GAPS}

REVIEW & ADOPT

Step Four 4
{FILL THE GAPS}

Amend Existing Codes and Develop New Codes

After the project team identifies gaps and barriers in existing codes and standards, the next step is to fill the gaps and remove the barriers by developing new draft code language. This step will likely be an iterative process as the project team reviews concepts and examples of how existing code and standards may be modified to emphasize an LID approach. Draft language may be revised multiple times to address concerns and address locally specific conditions. This section discusses and provides examples of LID designs and text for the range of topics introduced in Step 3.

Establish Process for Reviewing and Approving an LID Project

Before starting the code amendment process, it is a good idea to lay out the steps of the intended LID review and approval process to provide a framework for the process. Because LID site design mimics the natural hydrology of the site, it is very important to specify the details that need to be known by the applicant and jurisdiction early in the project review and approval process, so that there is sufficient technical information to guide the design of the site. This evaluation and documentation is known as a site analysis or composite site analysis. In most jurisdictions, integrating the elements of a composite site analysis will require adding the following elements to existing site plan submittal requirements:

REVIEW & APPROVAL PROCESS:

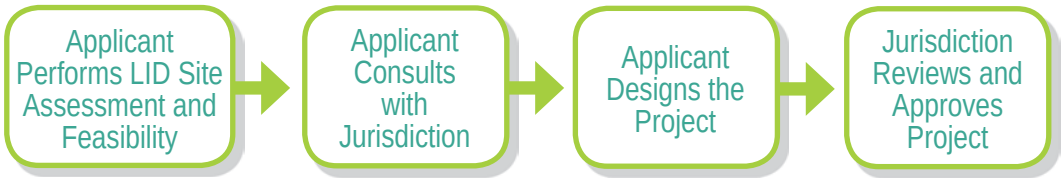

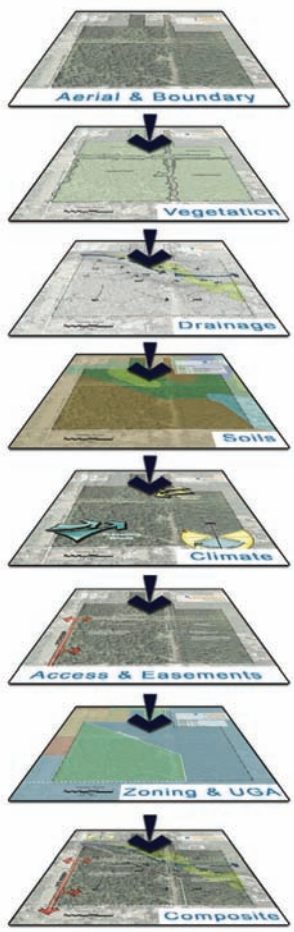

FIGURE 22
site analysis process

- *Requiring initial site assessment and feasibility by the applicant* – Most applicants already perform some level of site feasibility prior to initiating formal design. The goal of LID is to mimic a site's natural hydrology; therefore it is essential that this analysis occur at the earliest stages of project initiation. This will allow the applicant to identify those areas most suitable for development and to design a system of distributed small-scale LID BMPs throughout the site.

  The elements of an LID site assessment do not vary much from the site plan submittal requirements that many jurisdictions currently require. The primary difference between LID site assessment objectives and the traditional site plan submittal requirements involve the need for field verified on-site soils information and surveys of on-site vegetative cover early in the design process. These elements, which comprise vital components of a composite site analysis, typically are required by local government during the engineering design phase but seldom during earlier phases of project initiation.

  In LID projects, requiring these materials at the beginning of the site planning process represents the biggest departure from traditional site plan submittal requirements. These materials form the basis for a site analysis that allows the applicant and local government staff to confirm which on-site areas are most suitable for development and which are most suitable for placement of LID techniques. An example of site analysis language is included in the appendix.

- *Applicant consultation with the jurisdiction* – Once the applicant completes the initial site assessment work, it is important to have a pre-application process that allows the jurisdiction's development review team to review the applicant's preliminary feasibility evaluation and discuss the design and approval of the LID project.

- *Project design review and approval process* – After the applicant and the jurisdiction have the opportunity to make a preliminary determination on the feasibility of the LID design for the project, the formal application submittal and review process can begin.

Considerations and Standards

The following sections examine Comprehensive Plan Goals and Policies, Subdivision Codes, Zoning Codes and Development Codes and Standards. In each section, some general considerations are given to think about as part of the LID code revision process as well as suggestions on the kind of language to add in each section of code in support of LID standards.

Comprehensive Plan Goals and Policies

FIGURE 23
community plan workshop

Comprehensive plans are intended to reflect the long-term vision and goals of a jurisdiction and its citizens, as well as meet any statutory requirements for required elements and coordination with other plans. In part, comprehensive plans contain goals and policies that are intended to guide the regulation of the built environment and are an important way to support changes for LID in a jurisdiction's regulatory code.

Considerations

- Comprehensive Plan Goals and Policies should not present a barrier or hindrance to the use and adoption of regulations supporting LID. For example, a land use or transportation policy that calls for the use of standard curb and gutter for all development in a jurisdiction would not allow the flexibility to use LID best management practices (BMPs) in street design.
- Comprehensive Plan policies should be written to explicitly support LID.

LID Standards

- LID should be called out as the preferred method of addressing stormwater management unless proven infeasible.
- Policies or goals that present barriers to LID should be modified or removed.
- Policies supporting dual use of landscaping or open space and LID should be added as well as policies that preserve native vegetation and trees.
- Policies should include a preference for projects that minimize impervious surface area and reduce EIA.

Subdivision Code

The subdivision code provides rules and standards for subdividing land whether it is by preliminary plats, short plats, binding site plans, or other means.

Considerations

- In many cases, the subdivision code will be primarily concerned with enacting the procedural requirements of RCW Chapter 58.17 in a jurisdiction, but in some cases there will be additional requirements dealing with subdivision improvements that could affect the ability of a jurisdiction to implement LID BMPs.

Example LID Site Analysis Checklist Language

A. The site analysis requirements shall be submitted in addition to all other requirements for development approval for a project and may be submitted prior to the filing of other applications. The Administrator may chose to waive certain components required in this section as appropriate.

B. Purpose of the Site Analysis: Low impact development (LID) site design is intended to complement the predevelopment conditions on the site. LID Site Analysis is part of the process to determine feasibility of a project site for LID. The initial inventory and analysis process will provide baseline information necessary to design strategies that preserve natural resources, preserve areas most appropriate to evaporate, transpire, and infiltrate stormwater, and achieve the goal of maintaining pre-development natural hydrologic conditions on the site.

C. The site analysis shall include, at a minimum, the following information:

1. A survey prepared by a registered land surveyor showing existing public and private development, including utility infrastructure on and adjacent to the site, major and minor hydrologic features, including seeps, springs, closed depression areas, drainage swales, and contours as follows:
    a. Up to 10 percent slopes, two-foot contours.
    b. Over 10 percent to less than 20 percent slopes, five-foot contours.
    c. Twenty percent or greater slopes, 10-foot contours.
    d. Elevations shall be at 25-foot intervals.
2. A soils report prepared by a licensed geotechnical engineer or licensed engineering geologist. The report shall identify:
    a. Underlying soils on the site utilizing soil pits, soil grain analyses, and saturated hydraulic conductivity (shc) testing to assess infiltration capability on site. The frequency and distribution of soil pits and shc testing shall be adequate to direct placement of the roads, parking lots, and bioretention/rain gardens over those soils.
    b. Documentation of any possible shallow groundwater.
3. Preliminary drainage report consistent with the requirements of the jurisdictions stormwater management code.
    a. Topologic features that may act as natural stormwater storage or conveyance and underlying soils that provide opportunities for storage and partial infiltration.
    b. Depth to groundwater.
    c. Geologic hazard areas and associated buffer requirements as defined by the jurisdiction.
4. A survey of the existing native vegetation cover by a licensed landscape architect, arborist, qualified biologist identifying any forest areas on the site, species and condition of ground cover and shrub layer, and tree species, and canopy cover.
5. A streams, wetland, and water body survey and classification report by a qualified biologist showing wetland and buffer boundaries consistent with the requirements of the jurisdiction if present.
6. Flood hazard areas on or adjacent to the site, if present.
7. Aquifer and wellhead protection areas on or adjacent to the site, if present.
8. Any known historic, archaeological, and cultural features located on or adjacent to the site, if present.
9. Description of the proposed complete LID project including:
    a. Project narrative showing how the project will fulfill the requirement for on-site management of stormwater to the maximum extent feasible,
    b. Total area of designated development area,
    c. Total area of Native Vegetation Area,
    d. Total number of multi-family units proposed, if applicable,
    e. 1. Listing and extent of each LID BMP to be used. Explanation and documentation for any determination that an LID BMP was considered infeasible for the site, OR
        2. A statement that the site will achieve the LID performance standard,
    f. Maximum impervious surface proposed for the development,
    g. Total area of impervious surface and effective impervious surface and how proposed drainage plan reduces (to max extent) or eliminates EIA, and
    h. Proposed ownership of land areas within the complete LID project both during and after construction;
10. Areas of disturbed soils to be amended. (NOTE: All lawn and landscaped areas are to meet BMP T5.13. Use of compost is one way to meet the requirement).
11. The location and square footage or approximate location and square footage or acreage of all areas to be conveyed, dedicated or reserved as common open spaces, public parks, recreational areas, school sites, and similar public and semi-public uses with notations of proposed ownership included where appropriate.

* Check your Surface Water Manual and the Low Impact Development Technical Guidance Manual for Puget Sound for actual language.

- Requiring a higher degree of site analysis during the early stages of project conception is important to maximize design and functionality of LID BMPs.

LID Standards

- Require the use of LID techniques as a condition of approval for preliminary subdivisions. Add language to ensure that appropriate measures are taken to manage stormwater by LID where feasible and emphasize conservation and use of on-site natural features.
- Add provisions to require LID unless proven infeasible and other provisions that support LID such as preserving open space, native vegetation and sensitive environmental areas, minimizing impervious surfaces and eliminating EIA.
- Require that applicants conduct an LID site analysis and bring the results of this analysis to the required pre-application conference. The analysis would include information similar to that shown in the box on page 50 and identify proposed LID BMPs.

Zoning Code

Because implementing LID practices involves more than just the stormwater code, look for all opportunities to integrate the LID approach when reviewing the zoning code.

Landscaping, Native Vegetation, Tree Protection, and Open Space

Considerations

- Native vegetation plays an important first step in LID and its retention and protection should be stressed. Where possible, look to first retain existing native vegetation and emphasize the use of native and other drought-tolerant species in landscaping, especially conifers.
- Explore how tree protection, retention, and planting standards can work to maintain and expand vegetative cover in support of LID.
- Look for opportunities to support the dual use of landscaping for screening, buffers, aesthetics, and LID stormwater facilities. This includes promoting the preservation of open space where possible to meet stormwater and other desired functions.
- Review options for providing tree credits. Some jurisdictions offer stormwater credits for use of urban trees. For example, the City of Seattle provides stormwater tree credits based on a study of trees and stormwater management conducted by Herrera Environmental Consultants.

LID Standards

- Add a native vegetation retention section of code that requires setting aside a portion of the site being developed in native vegetation. Set native vegetation retention standards for sites based on land use and density. These standards should include a definition of native vegetation and

minimum tree density, minimum retention requirements, protecting native vegetation areas, replanting requirements, soil amendment standards, management plan specifications and maintenance requirements.

- A list of native species either in the code or referenced by the code would be a good addition. It should include plant lists, replanting standards, management plan specifications, and maintenance requirements. See the box below for references for native species.
- Language addressing native vegetation retention can be especially beneficial when combined with other requirements for open space, reserve areas, critical area buffers and development of other tracts of undeveloped land through the subdivision, PUD, or site plan review process.
- Adopt specific language emphasizing the benefits of retaining trees and native vegetation in development. This will include requirements for tree and native vegetation retention as well as replanting standards in support of LID.
- Tree conservation standards and minimum tree density standards can be based on a number of different systems such as a tree unit credit system or percentage of coverage or clustering. These standards can be adjusted to address different development intensities in a jurisdiction.
- Provide a tree species table in the code or referenced by the code listing Pacific Northwest native and near native species appropriate for native vegetation requirements. The list could consider species that are appropriate for different settings.
- Require landscape performance bonds to ensure plant survival.
- Because of their ability to intercept more stormwater during the winter months, emphasize the presentation and planting of conifers over deciduous trees.

Example Native Tree Retention and Replacement Code Language (Pierce County)

Title 18J – Development Regulations – Design Standards and Guidelines
18J.15.030

Table 18J.15.030-3. Tree Unit Credits	
Tree Category	**Tree Unit Credit**
Existing Tree 1" to 6" d.b.h.	1.0 tree unit per tree retained
Existing Tree > 6" </= 12" d.b.h.	1.5 tree units per tree retained
Existing Tree > 12" </= 18" d.b.h.	2.0 tree units per tree retained
Existing Tree > 18" </= 24" d.b.h.	2.5 tree units per tree retained
Existing Tree > 24" d.b.h.	3.0 tree units per tree retained
Significant Tree < 24" d.b.h.	2.5 tree units per tree retained
Significant Tree >/=24" d.b.h.	3.0 tree units per tree retained
Legacy Tree	10 tree units per tree retained
Replacement Tree – 2-1 Seedling (1)	.25 tree units per tree planted
Replacement Tree – Coniferous ≥ 4' in height, Deciduous ≥1 ½ " caliper	.75 tree units per tree planted

Footnote:
(1) Seedlings shall not be credited toward tree unit density requirements if placed on lots. (See 18J.15.030 E.2., Standards – Residential Lot Location)

1. **Retained Trees.** Trees to be retained on site must meet the following minimum standards to be credited toward the tree density requirements of this Section. Trees identified as having significant habitat value (i.e., Legacy Trees, snags or nesting trees) and those located within a critical area or its buffer may be credited toward the tree density requirements, regardless of the health or state of the tree. An evaluation of individual tree health shall not be required for such trees except for those trees within 1½ tree lengths of proposed structures or improvements:
   a. Post-development life expectancy of greater than 10 years;
   b. Relatively sound and solid trunk with no extensive decay or hollow and no significant trunk damage;
   c. No major insect or pathological problem;
   d. No significant crown damage;
   e. Full branching and general proportionality in height and breadth for the tree age; and
   f. Individual trees and groupings of trees proposed for retention must be wind-firm in their post development state.
2. **Replacement Trees.** Each tree proposed for planting must meet the following minimum standards to be credited toward satisfying the tree density requirements of this Section:
   a. Developments shall locate a minimum of 25 percent of the required trees in protected tracts, such as tree conservation tracts, recreation tracts, stormwater tracts, and critical area tracts;
   b. Trees shall be free from injury, pests, diseases and nutritional disorders and must be fully branched and have a healthy root system;
   c. Trees utilized for planting shall be a minimum 2-1 seedling size, unless a larger size is specified;
   d. Trees planted shall include a mix of coniferous and deciduous trees, with a minimum of 30 percent coniferous, unless the area is deemed to have been Oregon white oak habitat, in which case the standards in Title 18E, Development Regulations – Critical Areas, shall apply;

Impervious Surface Standards

Considerations

- Reducing total impervious surface area, hard surfaces and eliminating EIA, where feasible is a primary principle of the LID approach.

LID Standards

- Establish standards for both TIA and EIA.
- Establish standards for hard surface areas.
- Establish maximum EIA percentages for a range of zoning classifications in a jurisdiction, as opposed to just defining building coverage percentage. Allow certain uses such as commercial that require more surface area to use pervious surfacing to go above the effective impervious surface requirements.

Code example of TIA limit (City of Issaquah)

18.07.050 Impervious surface.

A. Purpose: The purpose of the impervious surface standard is to provide a balance of impervious and pervious surfaces on a lot, ensuring that adequate drainage is achieved and potential runoff of the lot is controlled. Some impervious surfaces, like recreational areas, provide visual relief from the built environment and create usable open space and linked areas which are an integrated part of the project. Pervious surfaces provide scenic corridors and visual relief from the built environment and provide protection for water quality and the natural environment. Where possible, pervious surfaces should be consolidated or linked so that these areas can also function as usable open space. Impervious surface standards are defined assuming no site constraints; in actuality, there may be site constraints that prevent the permitted impervious surface to be used.

B. Use of Pervious Areas: All required pervious areas on the site (per IMC 18.07.360, District standards table) shall be landscaped as required in this chapter. Parking or pedestrian access areas that use "pervious pavers" or pervious stormwater measures shall not be counted towards the required pervious areas of the land use district; however, stormwater regulations in IMC 13.28.055, Drainage review – Deviations for low impact development proposals, provide incentives for the use of pervious pavers and other low impact development measures. Required pervious areas shall include the following areas in order of priority:

1. Critical areas that require buffers;
2. Existing significant tree stands;
3. Native vegetation areas.

C. Native Vegetation Retention Areas: All projects with native vegetation areas shall retain the following minimum of the native soil area:

1. Twenty-five (25) percent for nonresidential uses and multifamily; and
2. Thirty (30) percent for single family residential uses (see Chapter 18.13 IMC, Subdivisions, for requirements for platting).

D. Impervious Surfaces: The total impervious surface of a site shall be determined by adding the square footage of all the following areas:

1. Buildings: The footprint of the buildings and structures, except buildings with vegetated roofs or minimal excavation foundations as identified in the LID Technical Guidance Manual;
2. Parking: The gravel and paved parking areas and driveways;
3. Sidewalks: The gravel and paved pedestrian walkways, sidewalks and bike paths;
4. Recreation Facilities: Decks, patios, porches, tennis courts, sport courts, pools and other similar recreation facilities;
5. Recreation Areas: Gravel and paved picnic areas, pedestrian access and paved recreation areas;
6. Architectural Features:
   a. Eighteen (18) Inches or Less: Eaves and overhangs which extend past the building footprint are permitted; however, overhangs which are eighteen (18) inches or less shall not be included as impervious surface.
   b. Over Eighteen (18) Inches: Large overhangs which extend over eighteen (18) inches past the building footprint, such as cantilevered decks and other large roof extensions, shall be included in the impervious surface ratio calculation and shall not subtract the first eighteen (18) inches for the impervious surface ratio

Code example of TIA limit (City of Issaquah), continued

calculation. Large overhangs shall not be included as impervious if the underlying impervious surface is already being counted;

7. Stormwater Facilities: Open, uncovered stormwater retention/detention facilities shall not be considered as impervious surfaces for the purposes of this Code;

8. Miscellaneous: Any other structure or surface which prevents or retards the entry of water into the soil surface, or causes water to run off the surface in greater quantities or at an increased rate from present flow rate under natural conditions prior to development shall be considered an impervious surface. For purposes of this section, grass and sod are not considered impervious surfaces.

E. Impervious Surface Ratio: The impervious surface ratio is a measure of the proportion of the site occupied by impervious surfaces. The impervious surface ratio added to the pervious surface ratio equals one hundred (100) percent of the total gross site area. Gross site area includes any dedication for public right-of-way easement. Right-of-way dedications shall not be considered as impervious surface. Where possible, pervious surfaces should be consolidated or linked so that these areas can also function as usable open space.

$$\text{Impervious Surface Ratio:} = \frac{\text{All Impervious Surface (Acres)}}{\text{Gross Site Area (Acres)}}$$

F. Impervious Surface in the CBD Zone: Through-block pedestrian connections in the Cultural and Business District (CBD) zone shall not be considered as impervious surface for the purposes of calculating impervious surface ratios. (Ord. 2546 § 3, 2008; Ord. 2497 § 1, 2007; Ord. 2311 § 3, 2001; Ord. 2108 § 7.2.2, 1996).

18.07.360 District standards table.1

ZONING DISTRICTS	STANDARDS									
	DU/acre or density (maximum)	Minimum Lot Size	Front Setback[2, 3]	Side Setback[2, 3]	Rear Setback[2, 3, 12]	Impervious Surface[4]	Pervious Surface[4]	Base Building Height	Max. Building Height[10]	Min. Lot Width[5]
CONSERVANCY/RECREATION										
TP-NRCA: Tradition Plateau Natural Resource Conservation Area	Not applicable	5 acres	100 ft	100 ft	100 ft	10 %	90 %	30 ft	Not applicable	Not applicable
C-REC: Conservation Recreation		5 acres	100 ft	100 ft	100 ft	10 %	90 %	30 ft		
RESIDENTIAL										
C-RES: Conservation Residential	1 du/5 acres	5 acres	75 ft	75 ft	75 ft	10 %	90 % [6]	30 ft	Not applicable	No minimum
SF-E: Single Family – Estates	1.24 du/acre	35,000 sq ft	30 ft	15 ft	30 ft	30 %	70 % [6]	30 ft		135 ft
SF-S: Single Family – Suburban	4.5 du/acre	9,600 sq ft	20 ft	8 ft	10 ft	40 %	60 % [6]	30 ft		70 ft
SF-SL: Single Family – Small Lot	7.26 du/acre	6,000 sq ft [8]	10 ft [9]	6 ft	20 ft	50 %	50 %	30 ft	40 ft [10]	No minimum
SF-D: Single Family – *Duplex*[7]	SF Detached = 7.26 du/acre	6,000 sq ft [8]	10 ft [9]	6 ft	10 ft	50 %	50 %	30 ft	Not applicable	50 ft

Bulk and Dimensional Standards

Considerations

- To offset reductions in EIA, review the existing bulk and dimensional standards to look for ways to allow more flexibility in site design for LID, such as increasing building height or reducing building setbacks.
- Look for opportunities to balance changes made to support LID with ways to achieve other goals, such as increasing density, providing flood plain protection, or supporting commercial development.
- Allow clustering, options for development, and increased densities in higher intensity areas.

LID Standards

- When there is a reduction in building footprint, increase height limits to help meet density goals and reduce EIA by incentives or in specific higher density areas where LID is applied.
- Reduce setbacks to allow greater flexibility with site design for LID either through incentives or higher intensity areas.
- If structured parking is not feasible, use pervious pavement to increase parking area, sidewalks, or plaza while allowing for LID where feasible.
- Examine performance based design standards to allow greater flexibility in site design in exchange for more opportunities to make LID work.
- Encourage structured parking where possible to reduce EIA.
- Look at how design standards can be used to decrease EIA by more flexible site design.
- Look at how parking standards can be adjusted to reduce EIA, such a minimum and maximum stall requirements, use of pervious paving, and reduced stall size.
- Consider increasing density within Urban Growth Areas that are suitable for more intense development to preserve areas more suitable for large scale LID development.

Site Plan Review

Considerations

- Site analysis (see sample on page 50) requirements should be a necessary addition to the code in the early stages of project conception. Site analysis requires the applicant to document the site with both textual and graphic information early in the development review process. That allows for LID to be incorporated into the site design at the early stages of project conception, and the placement and function of LID facilities is not compromised. See box below.
- Look at mechanisms in other sections of the code to decrease building footprints, reduce EIA, reduce hard surfaces and retain tracts of native vegetation.
- Think about how to best protect LID related features during the development and construction process.
- Consider an LID consultation process for small residential development activities and for single-family residential lots where LID is required.

LID Standards

- Require applicants to conduct an LID site analysis (see sample on page 50) prior to submitting a site plan review application and make sure all required elements are present.
- Outline construction sequencing and practices for protecting pervious areas and LID BMPs during construction.
- Ensure that LID has been used in all cases except where it is not feasible.
- Review the project design to ensure that stormwater is being adequately managed in distributed, small scale LID hydrologic controls.

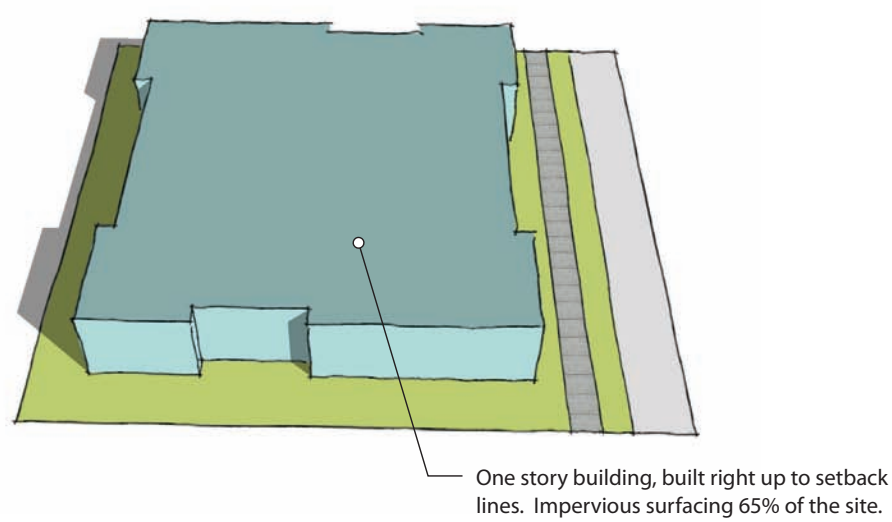

FIGURE 24
example of conventional development

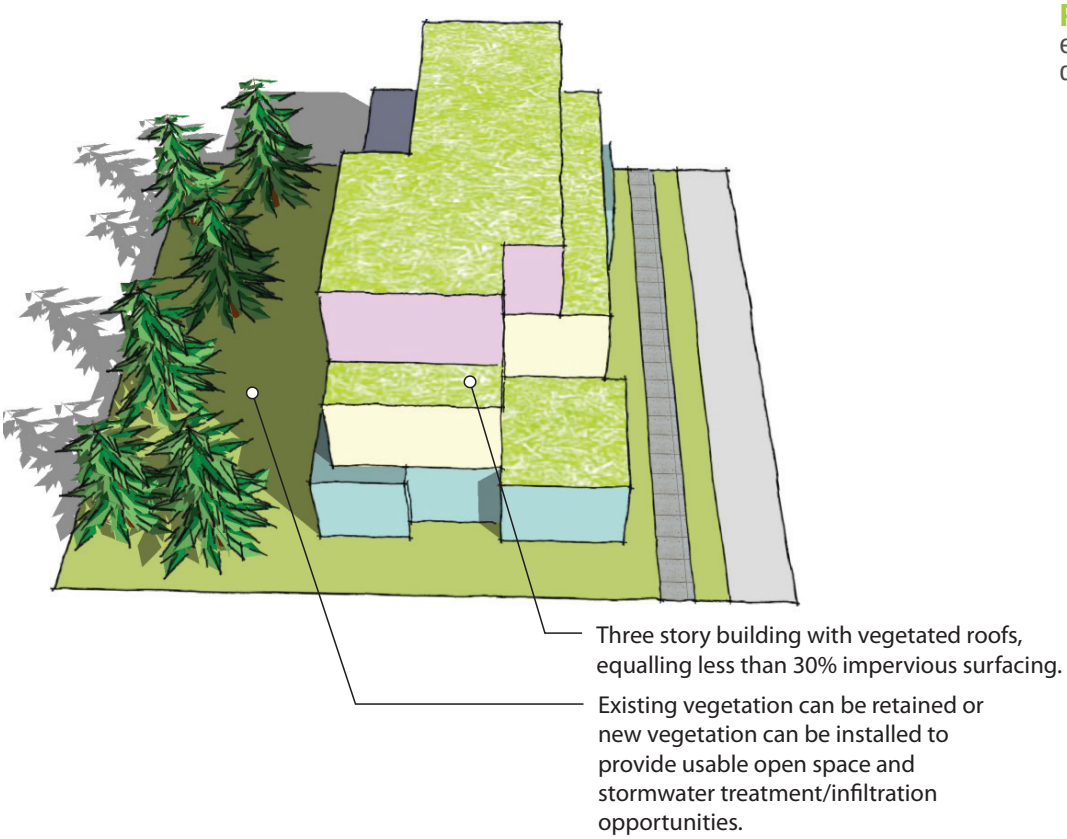

FIGURE 25
example of LID development

Parking

Considerations

- Look to revise code to facilitate permeable surfacing in parking areas to the extent feasible.
- Look for opportunities to reduce the amount of EIA in parking lots through a variety of methods such as:
  - » Reducing the number of required parking spaces.
  - » Specifying a maximum number of parking spaces that cannot be exceeded.
  - » Reducing parking space dimensions and circulation corridors and/or provide for compact spaces.
  - » Utilizing pervious pavement and other materials that allow surface water to infiltrate and/or evaporate rather than enter storm ponds.
- Allow the dual use of parking lot landscaping for both an aesthetic and stormwater management function. Allow parking curbs and gutters to have "breaks" to allow surface water to enter bioretention facilities within parking landscape islands.

FIGURE 26
typical parking lot with no vegetation to intercept precipitation and stormwater runoff runs directly to a catch basin

FIGURE 27
LID parking lot with pervious surfacing and bioretention

- Look at preparing a parking survey to evaluate current parking requirements. The survey would help to analyze whether or not current parking requirements were in line with other jurisdictions in the Puget Sound area. Results of the parking survey could help to determine if parking code revisions to support LID are needed for future redevelopment projects.

LID Standards

- Add language that requires the use of LID BMPs in parking lots where site and soil conditions make such LID techniques feasible. This would include the use of permeable surfacing, where appropriate, establishing minimum and maximum parking ratios, and reducing the size of spaces and access ways.
- Add language integrating LID stormwater management facilities into parking lot landscaping where feasible.
- Add language requiring all parking spaces above the minimum number required by code to be pervious unless infeasible.
- Adjust parking ratios as needed after reviewing existing standards.

Planned Unit Developments

Considerations

- Look at mechanisms that support clustering, such as cottage housing developments, to reduce building footprints, EIA and retain tracts of native vegetation.
- Preserve the ecological benefits of large tracts of undeveloped land.
- Recommend adding LID site analysis be a requirement for PUDs, so that LID can be incorporated into the site design in the early stages of project conception.

FIGURE 28
example of conventional development compared to LID

LID Standards

- Require applicants to conduct an LID site analysis as outlined on page 50 prior to submitting a site plan review application.
- Require native vegetation retention, native soil protection and amendment, and site design flexibility as well as LID when feasible.
- Allow a range of mechanisms that support clustering development.

Development Code and Standards

In many jurisdictions, clearing, grading, streets, and engineering details can be found either in the development code or in administratively adopted construction standards. Wherever they are located, they will need to be evaluated to see how well they address LID requirements.

Clearing and Grading Standards

Considerations

- Minimizing on-site disturbance is a good way to protect the natural vegetation, soils and natural water flow on a site.
- Outline construction sequencing and practices for protecting pervious areas and LID BMPs during construction.

FIGURE 29
example of conventional grading

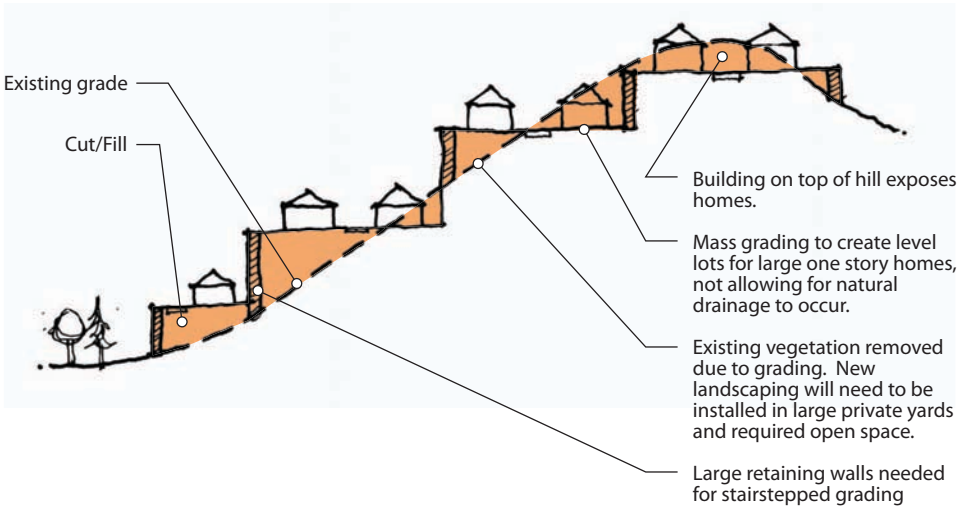

FIGURE 30
example of LID grading

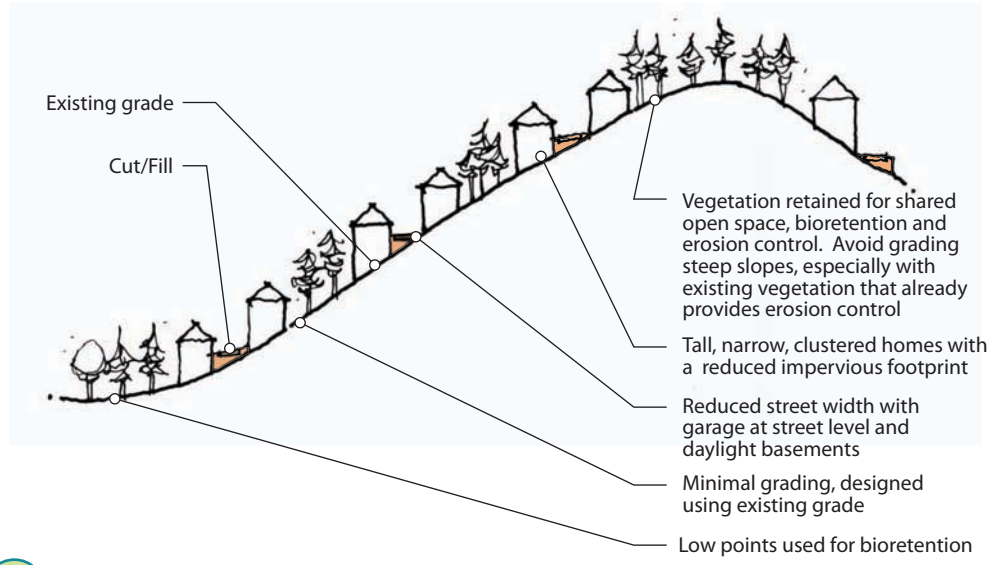

LID Standards

- The draft Clearing and Grading ordinance reflects typical administrative requirements and LID BMPs and provides a set of 'performance standards' that address site containment, construction phasing, protecting pervious areas, including native soils and vegetation, and LID facilities during construction process, and minimizing the amount of clearing and grading necessary to build on the site.

Engineering and Street Standards

Considerations

- The use of LID should not require deviations or variances to accommodate LID within public rights-of-way.
- Street standards should be evaluated to allow LID street design alternatives and support the application of pervious surfaces.
- Street standards should not be a barrier to the application of LID, such as requirements for curb and gutter on all streets.
- Provide guidance for the maintenance of LID facilities, pervious pavement, rain gardens and other LID management techniques.
- Look at standards for proper separation of LID facilities and utilities.
- Recommend standards that will minimize impervious surface and provide opportunities to manage stormwater within the right-of-way using assorted LID practices. Street sections should be the minimum necessary for safe access and emergency response according to International Fire Code, section 503 (or local equivalent). Street sections should accommodate LID facilities, pervious pavement where appropriate and feasible, and not conflict with other goals, such as native vegetation retention, minimizing site disturbance, etc.
- Address phasing, bonding and project sequencing.
- Consider how to address LID on small, residential sites, especially in infill situations, that fall under Ecology's threshold for flow control and/or treatment of stormwater. Look at requirements for new development on existing single-family lots to manage stormwater through a combination of LID BMPs unless infeasible.

LID Standards

- Add language for LID projects to conform to the most current edition of the *LID Technical Guidance Manual for Puget Sound*.
- Avoid locating utilities below bioretention facilities.
- Address maintenance responsibilities procedures and guidelines for LID stormwater management facilities in the Engineering Standards, including bioretention swales, permeable paving; vegetated roofs; and rainwater harvesting collection systems
- Make sure that the appropriate code language is in place to allow jurisdiction staff the right to inspect facilities annually and bill the appropriate party for

labor and materials if the facility is not functioning properly.

- Establish the means to require financial guarantees for LID facilities, when deemed necessary, in order to help ensure the success of LID facilities.
- Require street trees and landscaping not only on major arterials, but also for all types of streets.
- Require permeable surfacing for streets, sidewalks and parking areas.
- Reference techniques described in the *LID Technical Guidance Manual for Puget Sound*.
- Add LID street standards and details such as:
  - » LID Typical Street (Arterial) – shows typical LID street section with bioretention swales, driving lanes, parking lanes, and sidewalks.

FIGURE 31
typical LID detail for arterial streets

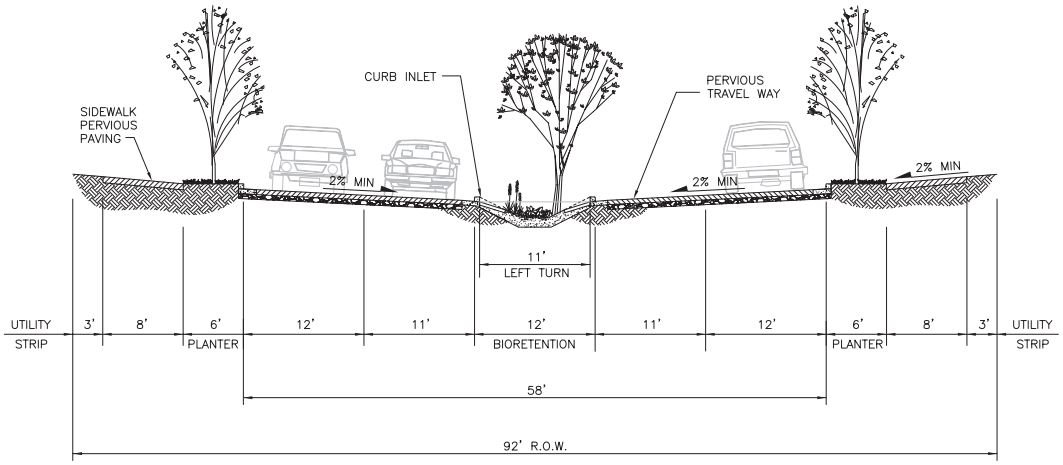

  - » LID Typical Street (Local Access) – shows typical LID street section with a bioretention swale, driving lanes, parking lane, and sidewalks.

FIGURE 32
typical LID detail for local streets

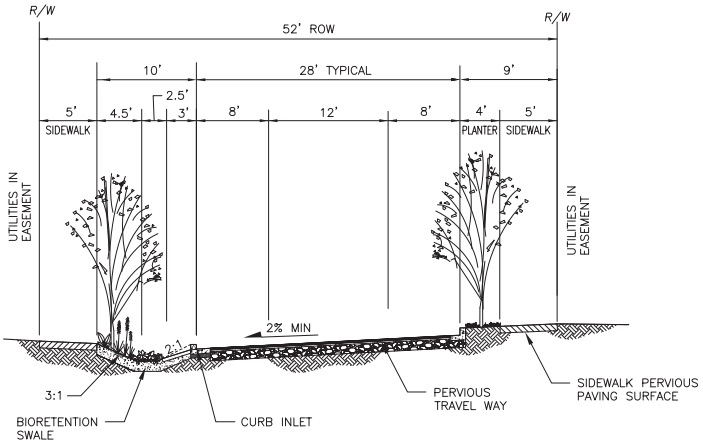

» LID Typical Cul-de-Sac – shows an LID cul-de-sac plan that includes pervious sidewalks and a bioretention swale in the middle of the cul-de-sac.

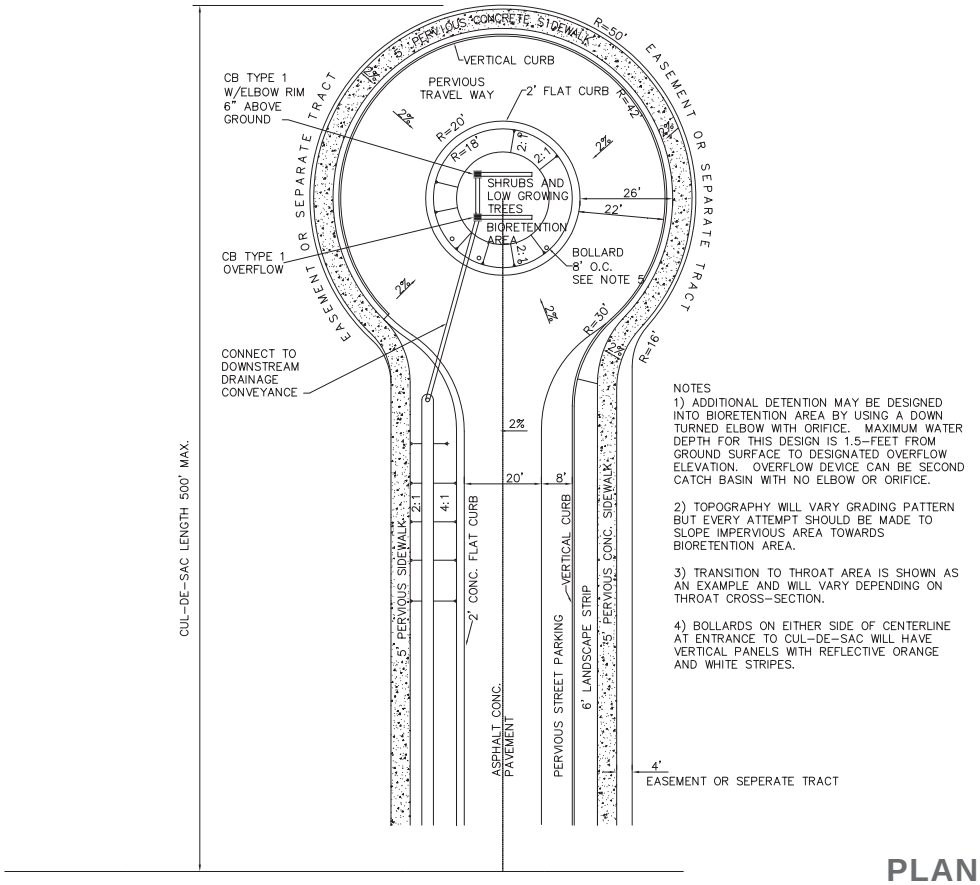

PLAN

FIGURE 33
typical plan view LID detail for cul-de-sacs

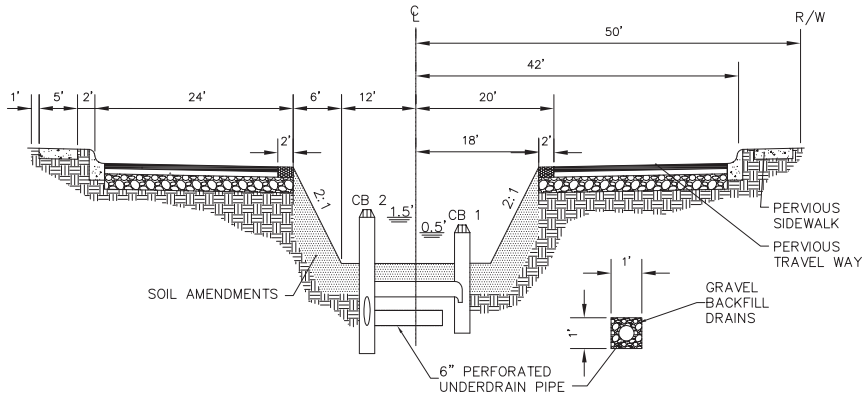

FIGURE 34
typical section view LID detail for cul-de-sacs

CB 1 – DETENTION CB
RIM ELEV. SET 6 INCHES ABOVE FINISHED GRADE.
SHOULD BE CB TYPE 1 OR EQUIVALENT 18" ø ADS TYPE.
OUTLET IS DOWNTURNED ELBOW WITH ORIFICE. CONNECT OUTLET TO CB 2.

CB 2 – OVERFLOW CB
RIM ELEV. SET 18 INCHES ABOVE FINISHED GRADE. CONNECT PERFORATED UNDERDRAIN PIPES TO CB. OUTLET TO CONVEYANCE CHANNEL WITHIN THE DEVELOPMENT OR TO DISPERSION TRENCH ADJACENT TO NATURAL RESOURCE PROTECTION AREA.

NOTES
1) IN BIORETENTION AREA COMPOST SHOULD BE AMENDED TO A 13 INCH DEPTH (ABOUT 5 INCHES OF COMPOST TO 8 INCHES OF SOIL). COMPACT SUBSOILS MUST BE SCARIFIED AT LEAST 4 INCHES BELOW THE 13 INCH DEEP AMENDED LAYER. THE BIORETENTION SOIL, COMPOSITION AND pH LEVELS SHALL MEET THE STANDARDS SET FORTH IN THE *LID TECHNICAL GUIDANCE MANUAL FOR PUGET SOUND* (CURRENT EDITION).

2) BIORETENTION AREA SHALL BE VEGETATED WITH NATIVE TREES AND SHRUBS HOWEVER VEGETATION WITHIN 6 FEET OF THE INSIDE RADIUS EDGE OF THE REINFORCED GRASS SHALL NOT BE OVER 18 INCHES IN HEIGHT.

SECTION

» LID Vertical Curb and Gutter with Inlet Detail – features a detail of a vertical curb with breaks at bioretention swales.

FIGURE 35
typical plan view
LID vertical curb
inlet detail

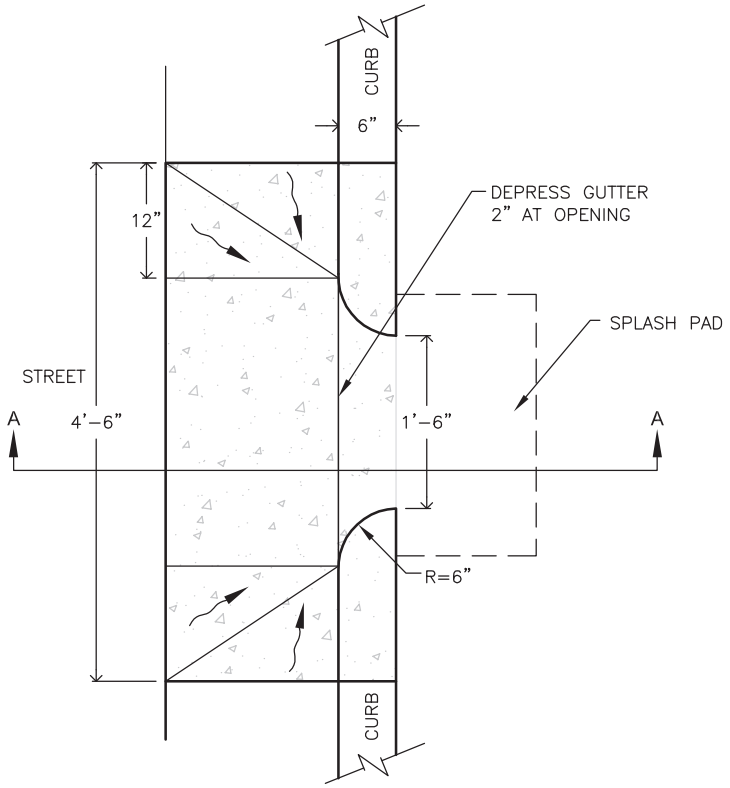

PLAN VIEW

FIGURE 36
typical section view
LID vertical curb
inlet detail

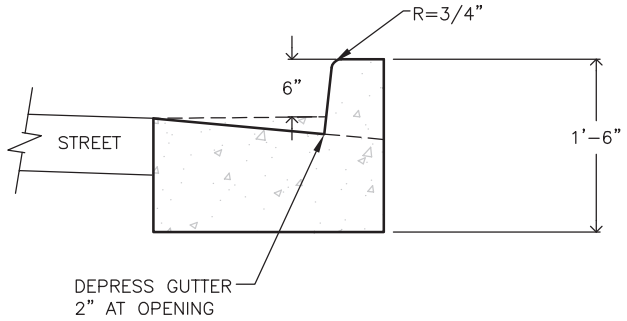

SECTION A-A

» LID Flat Curb Detail –

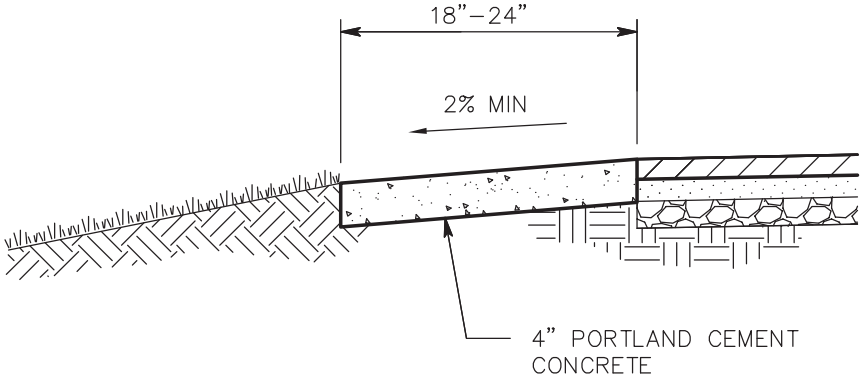

FIGURE 37
typical LID flat curb detail

» LID Parking Island Planter Bed Plan – shows how LID stormwater management facilities can be incorporated into landscaping.

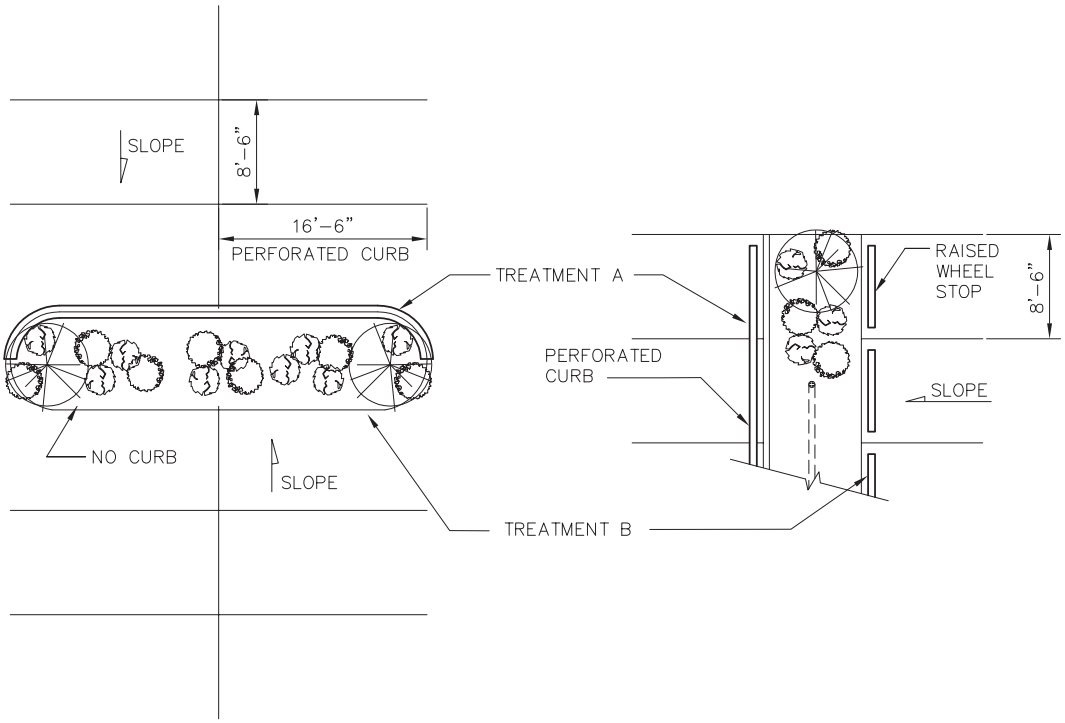

FIGURE 38
typical LID flat curb detail

» LID Pervious Paving Details – shows pervious concrete surfacing, pervious concrete shoulder, and grass paving details.

FIGURE 39
typical LID pervious paving details

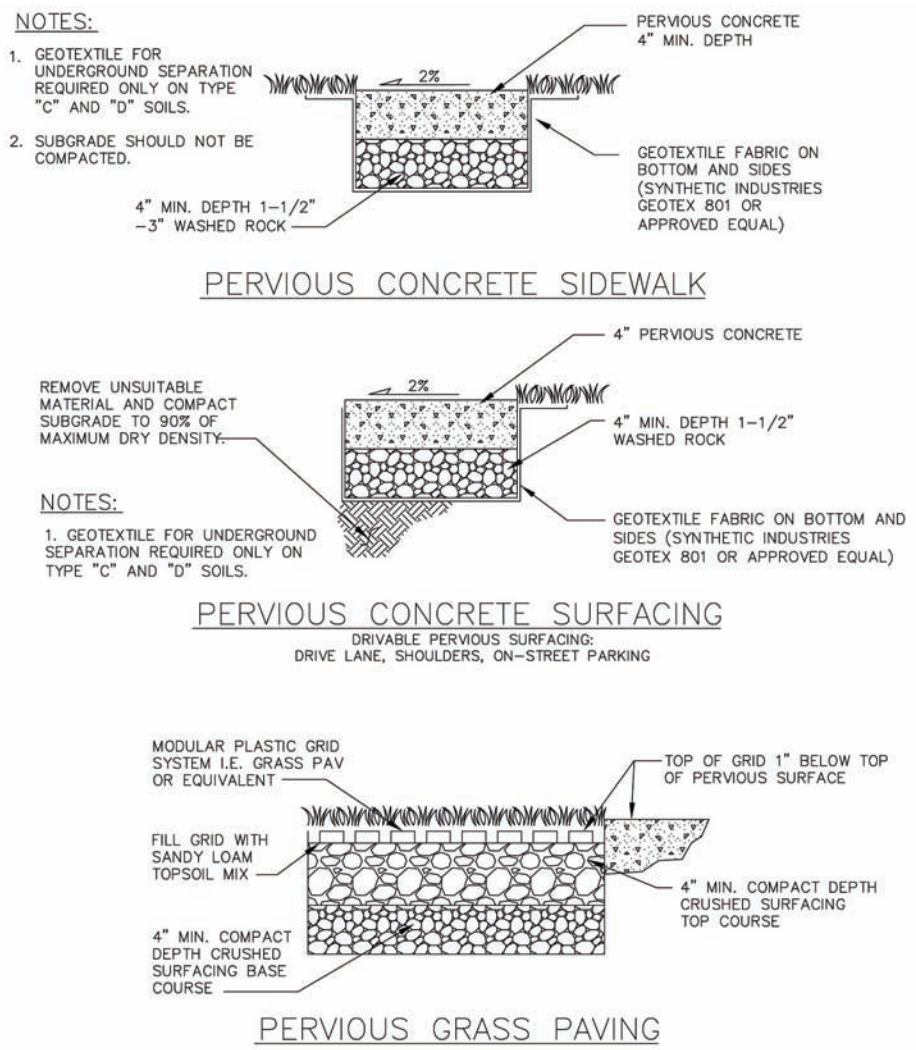

» Curb Inlet Detail – features a detail of a vertical curb with breaks at bioretention swales.

FIGURE 40
typical LID curb inlet detail

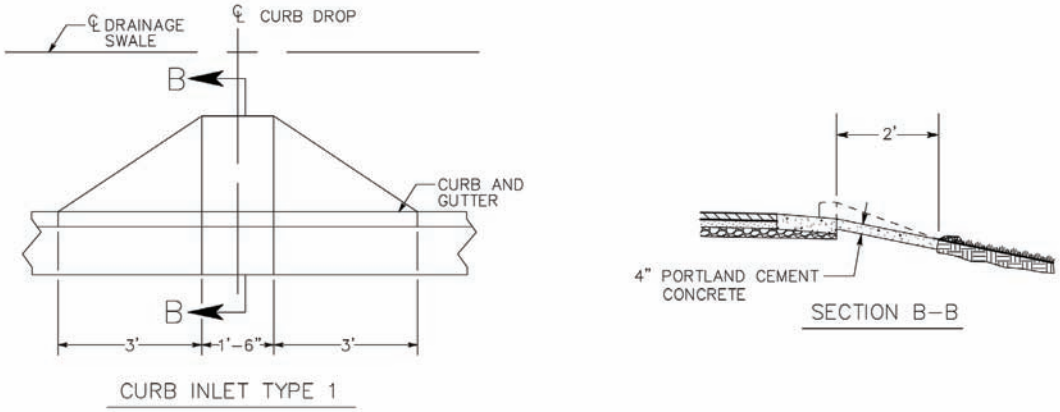

» LID Bioretention Detail – shows the minimum standards for a bioretention swale, with requirements for soil depth and type, maximum slopes, and swale depths.

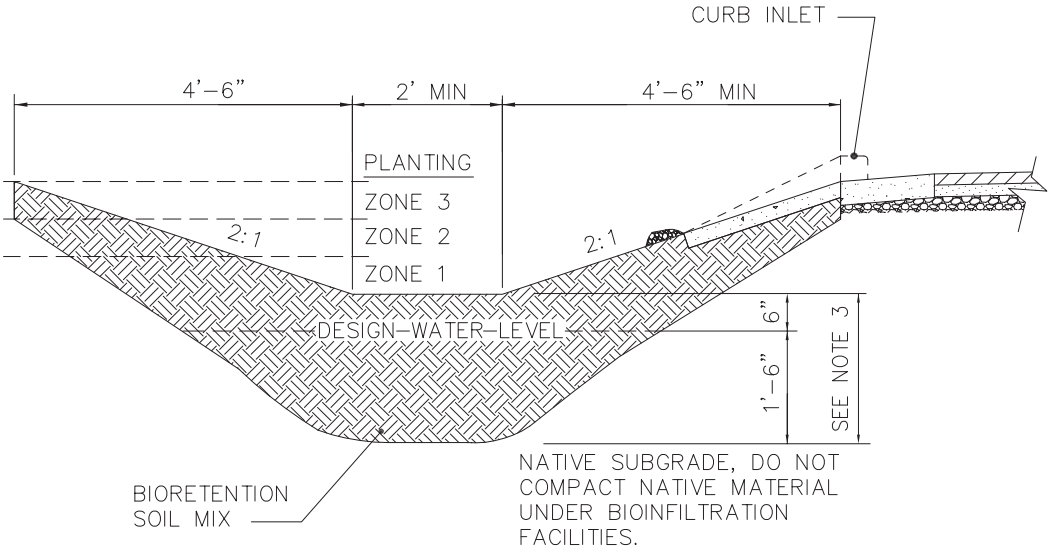

FIGURE 41
typical LID bioretention detail

» Recessed Tree Box – features a recessed tree box in which surface water runoff is either directed toward the tree box via contoured paving or is conveyed into the existing storm drainage system

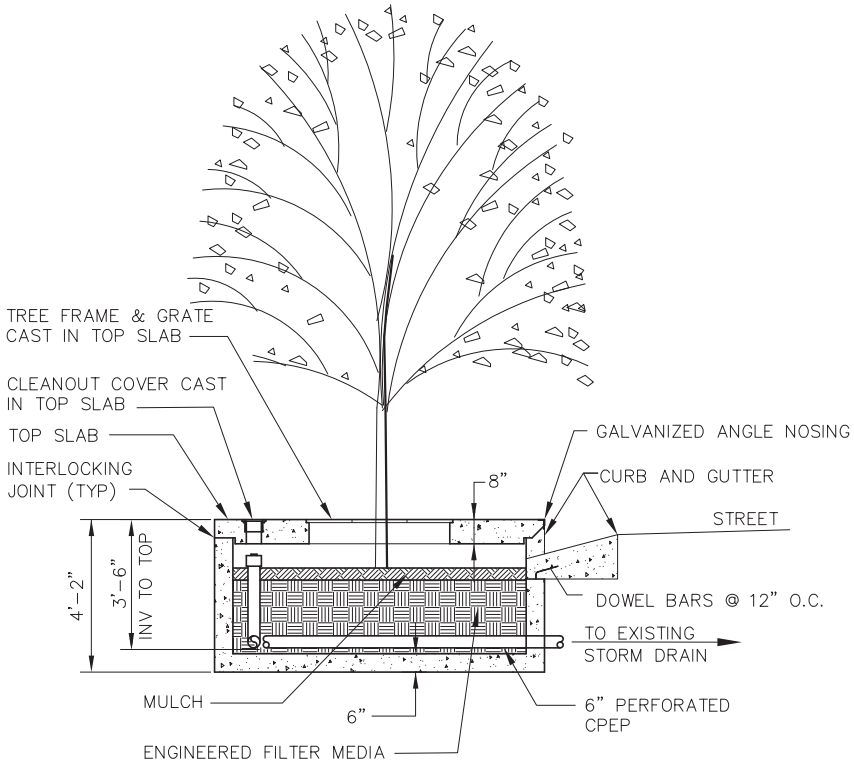

DESIGNATION	LENGTH	WIDTH	TREE GRATE QTY & SIZE
4 X 6	4'–0"	6'–0"	(1) 3X3
4 X 8	4'–0"	8'–0"	(1) 3X3
6 X 8	6'–0"	8'–0"	(1) 4X4
6 X 10	6'–0"	10'–0"	(1) 4X4
6 X 12	6'–0"	12'–0"	(2) 4X4

FIGURE 42
typical LID recessed tree box

FILL THE GAPS

{REVIEW & ADOPT}

IMPLEMENTATION

Step Five 5
{REVIEW & ADOPT}

Public Review and Adoption Process

Once the project team has developed new codes or modified existing codes and standards to address gaps in addressing LID, the next step is the public review and adoption process. In this step, the guidebook provides general overview of a typical code modification process, discusses timing, and the review and adoption process. In addition, this step includes lessons on how best to present the proposed amendments to your elected officials and a summary of some of the adoption lessons learned by other jurisdictions that already have LID codes and standards in place.

Public works staff administratively adopt a variety of development controls in the form of technical engineering standards and guidelines. Although there are many ways to integrate development standards into local land use controls, often public works directors are vested with the authority to adopt details for public streets, including curb, gutter and sidewalk standards as well as storm drainage BMPs. This step does not describe in detail the adoption process associated with administratively adopted standards but rather focuses on strategies for the successful adoption of legislatively adopted development controls.

General Overview of Code Modification Process

Amendments to local zoning, subdivision, landscape, parking, stormwater, street standards and other development codes serve to achieve one or more of the following overall objectives of the LID amendment process:

- Removal of impediments to the use of LID BMPs
- Defining structural and non-structural LID practices
- Establishment of standards for LID BMPs
- Establishment of minimum standards for LID projects

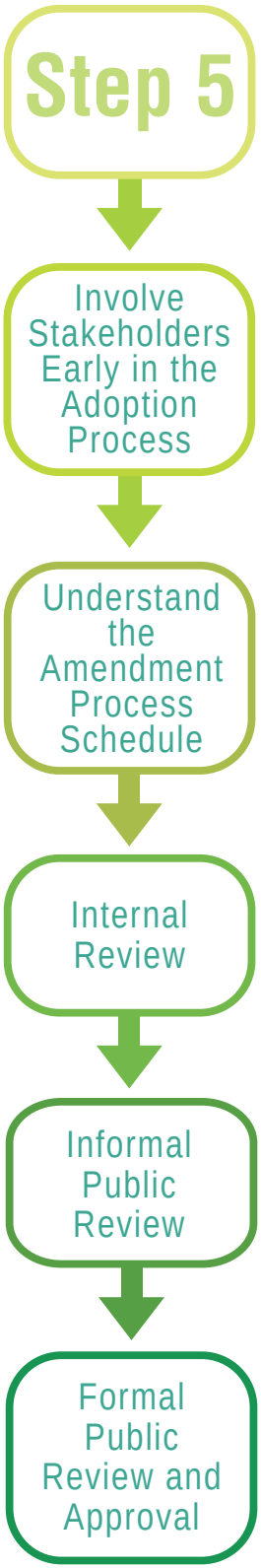

Involve Stakeholders Early in the Adoption Process

The key external participants identified in Step 1 should be brought into the public review and adoption process. These participants offer valuable perspectives to decision makers. When community members with technical expertise (e.g., civil engineers, landscape architects, etc.) participate, they can share with local descision makers important lessons and other technical information relevant to development in the jurisdiction.

Understand the Amendment Process Schedule

It is important to begin the amendment process early to accommodate several rounds of both internal and external review and refinement. Every jurisdiction should be able to project how long each step should take from experience and anticipate where more time may be needed to ensure that each part of the review and approval process is completed.

Internal Review

Building on the project team's work together that started in Step 1, after the draft regulations are developed in Step 4, department managers should review the proposed changes to the standards if they did not actively participate in the preparation of the amendments. The managers will need to understand the changes to ensure regulatory consistency, make sure that there is buy-in by all departments to the new processes, and present the proposed changes to the public and elected officials.

Public Review

Identify Adoption Challenges

As local government staff completes the preparation of code amendments and review by the department managers, it is important to think about specific questions and concerns that may be raised during both the informal and formal adoption process and how they may be addressed. The Puget Sound Partnership conducted a survey in Spring 2010 of local government recipients of the LID Local Regulation Assistance Project during 2005-09. Survey respondents cited a number of challenges they faced during the code review and adoptions process, and potential solutions for overcoming these challenges:

Challenges

- Opinions that LID was not a proven, tested, and trusted means of handling stormwater.
- Misunderstandings about LID among elected officials related to cost and function.
- Perceptions of LID as expensive or not as effective compared with conventional methods.

Solutions

- Review the technical findings on efficacy of LID that are available.
- Prepare a list of local examples of completed LID projects for interested parties and elected officials. Consider setting up a tour of projects.
- Present cost studies that have been completed comparing LID practices with standard urban stormwater management practices. See the appendix for examples.

Informal Public Review Process

Prior to going into the formal adoption process, it may be useful to make the proposed code changes available for informal public review. Use the external stakeholder groups that you have been working with since Step 1 to elicit targeted feedback. Provide background information as well as the proposed code changes to stakeholders. This will allow the context of the proposed code amendments to be fully understood. Based on the input received, the amendments may be further refined and staff reports prepared to address issues identified in the informal public review process.

Formal Public Review Process

Depending on the individual jurisdiction, there may be a number of steps in the formal public review and approval process. In some cases, code amendments will go through a planning commission for their review, comment, and recommendation. From there, the amendment package may go to a subcommittee of the elected council or commission for further review and comment. Finally, there will be a formal comment period where additional public comment is accepted and then a public hearing prior to adoption by the legislative body.

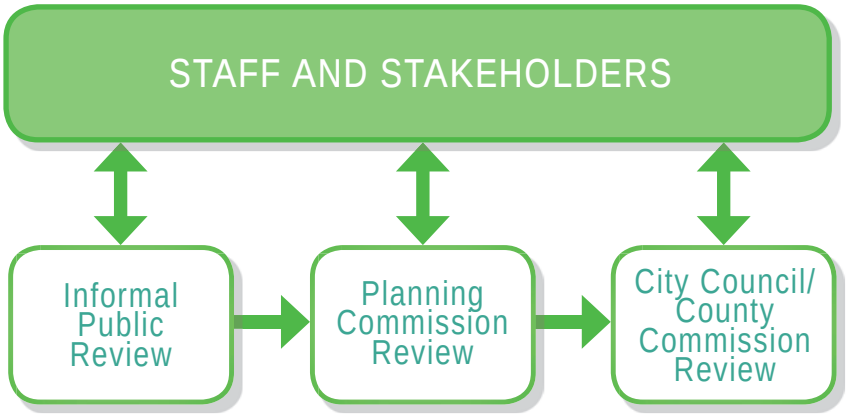

REVIEW & ADOPT

{IMPLEMENTATION}

APPENDICES

Step Six 6
{IMPLEMENTATION}

Ensure Successful Implementation

Once the new regulations have completed the public review and adoption process and standards have been administratively updated, the next step is to ensure the successful implementation of the new regulations and standards. This step includes addressing staffing, permit review procedures, ongoing training and education for staff and applicants, and establishing maintenance procedures and enforcement.

Staff Resources

To help ensure the successful implementation of LID, staff resources may need to be temporarily rebalanced and reprioritized so that local commitments for project review, construction inspections, and maintenance are kept. This temporary rebalancing of staff resources, if required at all, would be no different from the "getting up to speed" process that local jurisdictions face when other substantial amendment packages to codes or standards are completed. To the extent possible, it would be good for neighboring jurisdictions to look for ways share resources during this process.

Ongoing Training and Education

Training Staff

It is essential that staff training cover not only the effective review of LID designs, but also how to design projects and individual techniques, inspection techniques as well as training on how to maintain LID facilities. Counter staff, permit reviewers, inspectors, and enforcement staff should receive training so they can successfully guide project applicants, review permit applications, and inspect LID facilities. Training certification programs are available through a variety of sources discussed below. Jurisdictions will need to review and revise application materials, permit review procedures, process flow charts and permitting information given to the

public. It is important to discuss these changes with relevant staff and seek their input.

Training Applicants, Designers, and Contractors

Training applicants on LID BMPs, LID feasibility evaluation, and maintenance considerations is important for effective implementation of LID. Training can enhance the quality of permit applications. Training is also valuable for maintenance activities. As LID practices become more pervasive in projects throughout Western Washington, a broader segment of the public will understand the value of the practices and the need for training will diminish.

There are a variety of training programs, as well as manuals, brochures, and other resources available illustrating the benefits provided by LID, the uses of LID, and the types of LID BMPs and these are identified in the appendix. In addition, resources are available for residential homeowners to implement on-site stormwater retention when an engineer is not required.

FIGURE 43
WSU Extension/ Partnership LID Technical Workshop Series photo courtesy of Bruce Wulkan

Certification Programs

Staff certification adds legitimacy and precision to the steps of LID implementation – from gap analysis to drafting code change language to adoption, enforcement and maintenance. The University of Washington Professional & Continuing Education offers a LID certification program spanning three quarters that includes the discussion of the legislative authority for stormwater management and LID, the design of LID practices, and construction, inspection and post-construction principles and practices. The Washington State University/Puget Sound Partnership offers a LID Technical Workshop Series. These two-day workshops include sessions on bioretention, permeable paving, green roofs, minimal excavation foundations, rainwater collection systems, site planning and inspection.

Look for Efficiencies with Other Local Governments

Local governments of similar size or regulatory structure that have made progress in implementing LID may offer examples, guidance, and lessons to other jurisdictions. Other opportunities for efficiencies include shared training and demonstration projects.

Review and Establish Maintenance Procedures

Similar to standard urban stormwater management practices, LID techniques must be regularly maintained in order to perform as designed. Some of the maintenance agreements and activities associated with LID practices are similar to those performed for conventional stormwater systems; however, the scale, location, and the nature of an LID approach will also require new maintenance skills and strategies, since LID facilities range in size and complexity. LID maintenance often involves different equipment also (e.g., sweeper with suction for permeable pavement versus a vactor truck for catch basin cleaning).

Accordingly, entities responsible for maintenance should be matched appropriately to the tasks required to ensure long-term performance. An individual homeowner may be able to maintain a rain garden on their property or other small facility; however, larger facilities, including those in the right-of-way or dedications, often are more successfully maintained by private contractors, shared maintenance agreements or the responsible jurisdiction. The use and ownership of properties can often help dictate the most appropriate provider of facility maintenance.

Maintenance Schedules and Enforcement

Maintenance needs vary among different types of LID facilities. Some maintenance is done on a routine (annually or semi-annually) basis while other maintenance may be done less frequently as determined by inspection. Maintenance and inspection includes at time of installation and short-term establishment (up to 5 years) followed by ongoing enforcement of maintenance and ongoing inspections for the life of a project. Refer to the *LID Technical Guidance Manual for Puget Sound* for recommended maintenances procedures and schedules. Seattle Public Utilities also has a number of resources. The appendix has links to these resources.

Appendix H Facility Inspection and Maintenance Checklists | 2008

6. Permeable Pavement Inspection and Maintenance Checklist

Date: _____ Work Order # _____

Type of Inspection: □ post-storm □ annual □ routine □ post-wet season □ pre-wet season

Facility: _____ Inspector(s): _____

Defect	Conditions When Maintenance Is Needed	Inspection Result (0,1, or 2)†	Date Maintenance Performed	Comments or Action(s) taken to resolve issue
Sediment Accumulation	Sediment is visible			
Missing gravel/sand fill	There are noticeable gaps in between pavers			
Weeds/mosses filling voids	Vegetation is growing in/on permable pavement			
Trash and Debris Accumulation	Trash and debris accumulated on the permeable pavement.			
Dead or dying vegetation in adjacent landscaping	Vegetation is dead or dying leaving bare soil prone to erosion			
Surface clog	Clogging is evidenced by ponding on the surface			

FIGURE 44 excerpt from an example maintenance checklist

Appendices

Sources of Information

Websites:

Center for Watershed Protection: www.cwp.org

Department of Ecology:
Municipal Stormwater Permits/NPDES
www.ecy.wa.gov/programs/wq/stormwater/municipal/PermitsPermittees.html
and LID Standards
www.ecy.wa.gov/programs/wq/stormwater/municipal/LIDstandards.html

Low Impact Development Center, Inc.:
www.lowimpactdevelopment.org

Low Impact Development (LID) Urban Design Tools Website:
www.lid-stormwater.net

Natural Resources Defence Council:
www.nrdc.org/water/pollution/storm/stoinx.asp

Puget Sound Partnership: www.psp.wa.gov

Portland Bureau of Environmental Services Sustainable Stormwater:
www.portlandonline.com/bes/index.cfm?c=34598

Soils for Salmon: www.soilsforsalmon.org

SPU Natural Drainage Systems:
www.seattle.gov/util/About_SPU/Drainage_&_Sewer_System/GreenStormwaterInfrastructure/NaturalDrainageProjects/index.htm

Stormwater Management Manual for Western Washington:
www.ecy.wa.gov/programs/wq/stormwater/manual.html

The Economics of Low-Impact Development: A Literature Review:
www.econw.com/reports/ECONorthwest_Low-Impact-Development-Economics-Literature-Review.pdf

U.S. Environmental Protection Agency (EPA) LID resources:

LID Literature Review and Fact Sheet: www.epa.gov/owow/NPS/lid/lidlit.html
Costs Fact Sheet: www.epa.gov/owow/NPS/lid/costs07/factsheet.html

University of Washington Professional and Continuing Education:

www.pce.uw.edu/certificates/low-impact-development.html

Washington State University Extension:

LID Research: www.puyallup.wsu.edu/stormwater

Washington State University/Puget Sound Partnership LID Technical Workshop Series: http://conferences.wsu.edu/conferences/lidworkshops

Manuals and Books:

The Conservation Fund. Green Infrastructure Case Study Series. 2003.

Dunnett, Nigel and Noel Kingsbury. Planting Green Roofs and Living Walls. Portland, Oregon: Timber Press. 2010.

Ferguson, Bruce K. Porous Pavements. Boca Raton: CRC Press. 2005.

Natural Resources Defense Council. Rooftops to Rivers: Green Strategies for Controlling Stormwater and Combined Sewer Overflows. June 2006.

Puget Sound Partnership and the Washington State University Extension. Low Impact Development Technical Guidance Manual for Puget Sound. January 2005.

United States Environmental Protection Agency. Water Quality Scorecard. October 2009

Model Ordinances:

Feasibility Determination [Available directly from the Department of Ecology]

Grading, Land Clearing, and Tree Cutting Ordinance

Off-Street Parking

Planned Unit Development

Site Assessment

Stormwater or Surface drainage code [Available directly from the Department of Ecology]

Image Credits:

All graphics and photographs are from AHBL unless noted otherwise.